WWW.VALTORC.COM
AJBENTAL@VALTORC.COM
1 (866) VALTORC

SMART VALVE POSITIONER

SERIES SVP-2100-R/L

EXPLOSION PROOF DESIGN

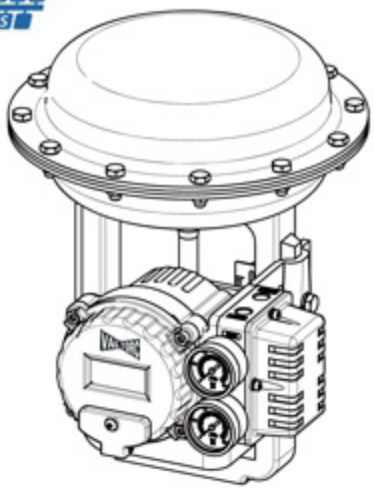

(Linear Type)

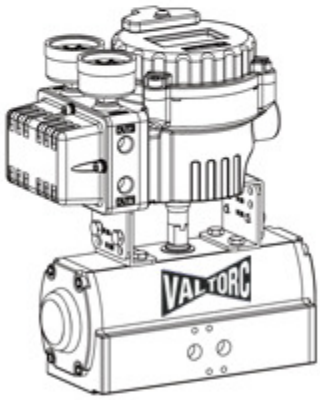

(Rotary Type)

Features

- Flameproof IECEx / ATEX / KC Ex d IIC T6
- Easy and quick auto-calibration
- Detecting RA (reverse acting) or DA (direct acting) automatically regardless of wrong air connections
- Available to use for single or double acting without any special adjustments
- Compact design allowing to be installed on small actuators
- Providing error messages against performance failures
- Possible to test the actuator with any fixed signal under a test mode
- Programmable characteristic curve with 17 points
- Wide operating temperature range -30 ~ +80℃
- Improved control of high-friction globe and ball valves by eliminating hunting
- Low air consumption
- Providing a mounting bracket to meet IEC 60534-6-1 for linear valves
- Supporting a NAMUR mounting pattern IEC 60534-6-2 (VDI/VDE 3845) and providing a multi-size mounting bracket for rotary valves

Options

- Output position transmitter (4 - 20 mA)
- 2 x alarm limit or micro switch
- HART communication
- Profibus communication

Specifications

Input Signal	4 - 20 mA @ 24 VDC
Min. / Max. Current	3.6 mA / 50 mA
Voltage Drop (Resistance)	Without Hart : 8.7 VDC (435Ω @ 20 mA) With Hart : 9.4 VDC (470Ω @ 20 mA)
Stroke / Angle	Linear type : 5 - 130 mm * Rotary type : 25 - 120°
Air Supply Pressure	1.4 - 7.0 bar (20 - 100 psi)
Output Pressure Range	0 - 100% of supply air pressure
Air Capacity	80 ℓ/min = 4.8 N㎥/h = 2.8 scfm (Sup = 1.4 bar) 233 ℓ/min = 14 N㎥/h = 8.2 scfm (Sup = 6 bar)
Air Consumption	2.8 ℓ/min = 0.17 N㎥/h = 0.1 scfm (Sup = 1.4 ~ 6 bar)
Characteristic	Linearity < ±0.3% F.S Sensitivity < 0.2% F.S Hysteresis < 0.2% F.S Repeatability < 0.2% F.S
Performance Characteristic	Linear, EQ %, Quick open, User set (17 points)
LCD Indication	4-digit LCD indicator
Adjustable Speed	1 - 1000 (lowest 1, highest 1000)
Scan Time	2ms
Shut-off Value	Range 0 - 10% of position signal
Valve Action	Direct action(DA) / reveres action(RA)
Operating Temperature	- 30 ~ +80℃ (- 22 ~ +176 °F)
Pneumatic Connections	Rc 1/4 or 1/4 NPT
Electrical Connections	2 x G 1/2 or 1/2 NPT
Protection Class	Flameproof IECEx / ATEX / KC Ex d IIC T6, IP66
Body Material	Aluminum die-cast / powder-painted
Weight	2.8 kg

* Up to 200mm on request ** -40℃ on request

Principle of Operation

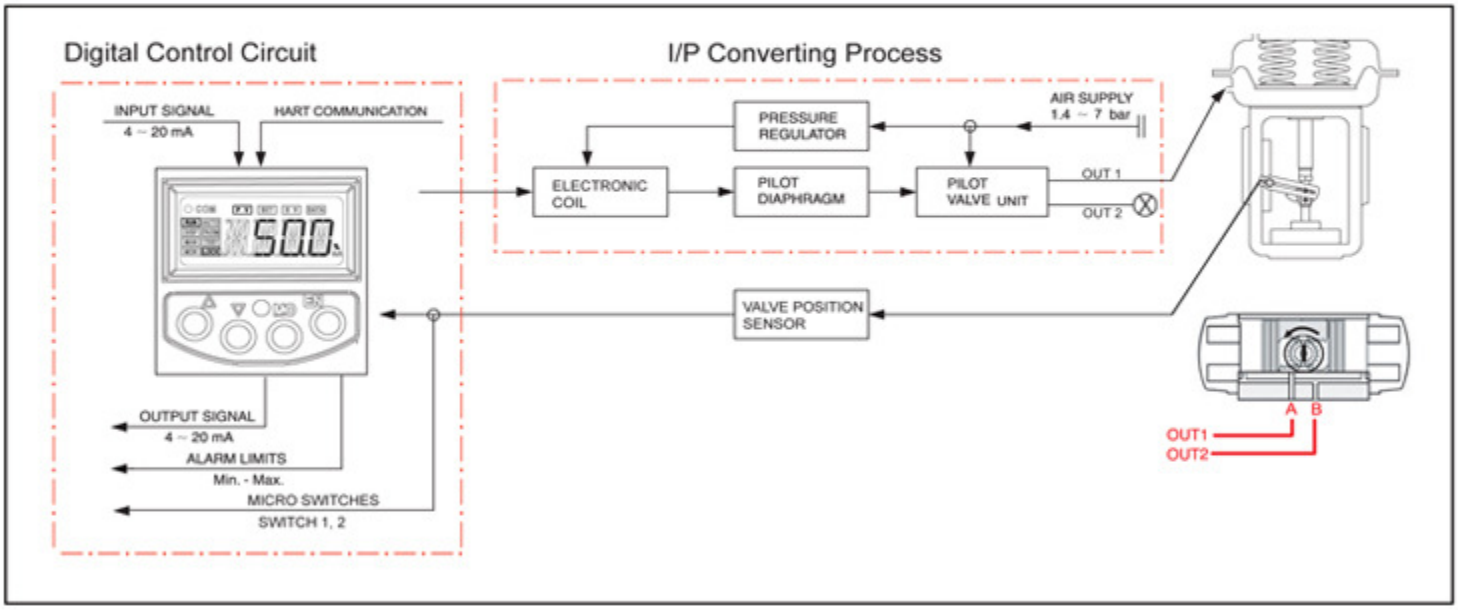

If 4-20 mA input signal is supplied, the micro processor compares input signal with position feedback and sends control signal to the I/P converting module. Pneumatic signal from the I/P converting module operates the valve and the valve stays at the desired position.

WWW.VALTORC.COM
AJBENTAL@VALTORC.COM
1 (866) VALTORC

Mounting to Linear Actuator

(Linear Type)

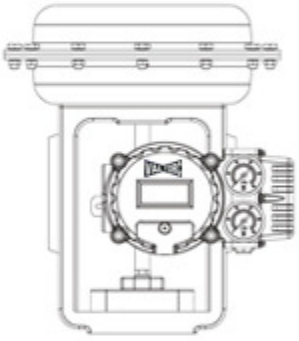

< Front View >

< Side View >

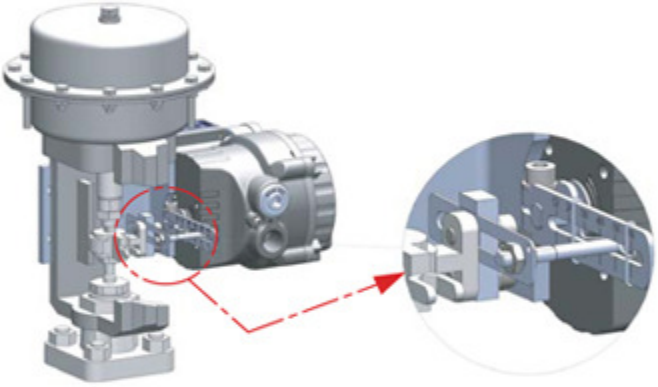

< Feedback Lever Connection >

"A" Type

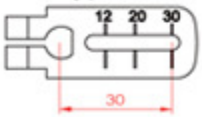

"B" Type

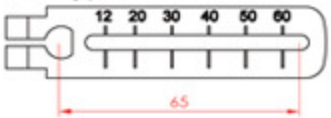

"C" Type

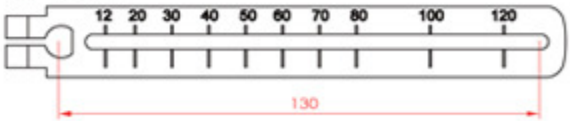

Feedback Lever

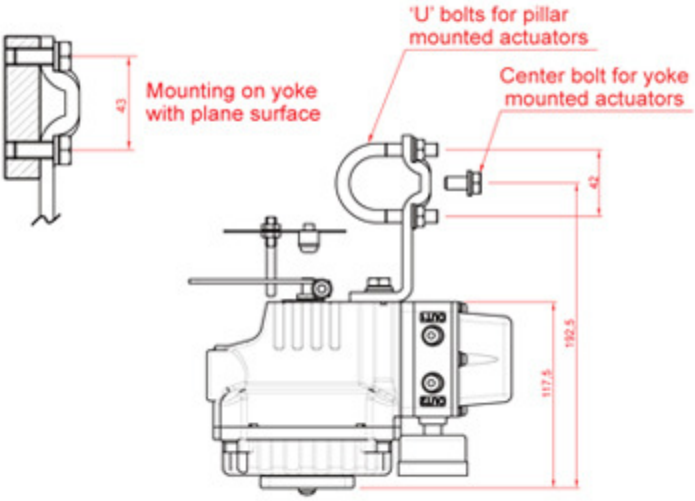

Mounting to linear actuators

Mounting to Rotary Actuator

(Rotary Type)

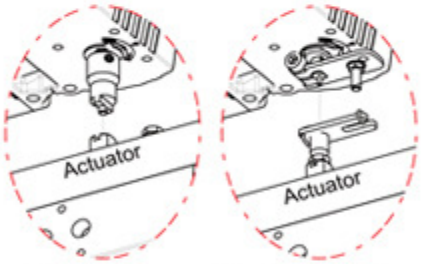

NAMUR Type Mounting

Fork Lever Type Mounting

Attachment Diagram of Multi-size Bracket

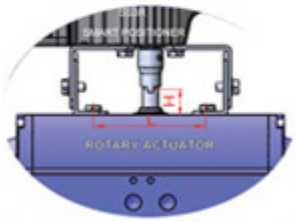

Size Variation of Multi-Size Bracket

1) 80 x 30 x 20 (H) , 4) 130 x 30 x 20 (H)
2) 80 x 30 x 30 (H) , 5) 130 x 30 x 30 (H)
3) 80 x 30 x 50 (H) , 6) 130 x 30 x 50 (H)

H : Rotary Actuator Shaft Height
L : Length (80 or 130mm)

Air Connections

(Linear Type)

Direct Acting (DA)	
DA 1 As the input signal increases, Valve stem moves downwards Actuator : DA	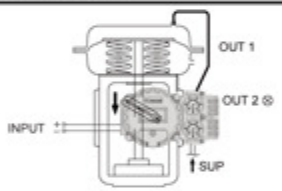 OUT2 must be plugged
DA 2 As the input signal increases, Valve stem moves downwards Actuator : DA	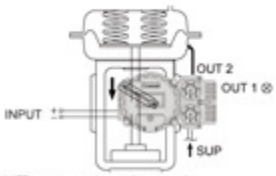 OUT1 must be plugged
DA 3 As the input signal increases, Valve stem moves downwards	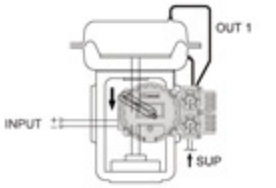

Reverse Acting (RA)	
RA 1 As the input signal increases, Valve stem moves upwards Actuator : RA	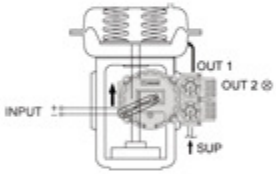 OUT2 must be plugged
RA 2 As the input signal increases, Valve stem moves upwards Actuator : RA	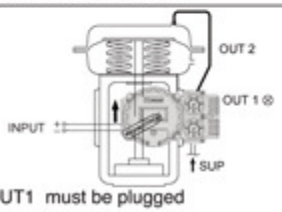 OUT1 must be plugged
RA 3 As the input signal increases, Valve stem moves upwards	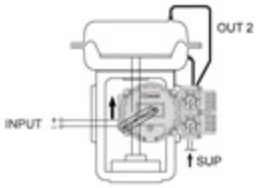

(Rotary Type)

Spring Return	Double Acting	Double Acting
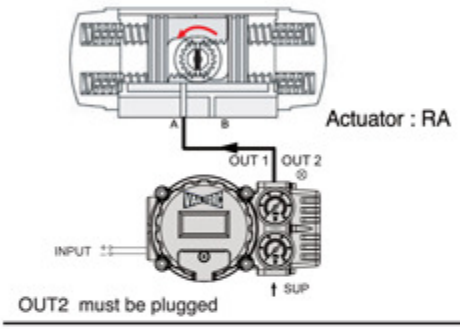 OUT2 must be plugged	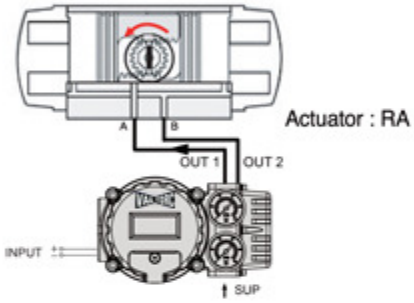	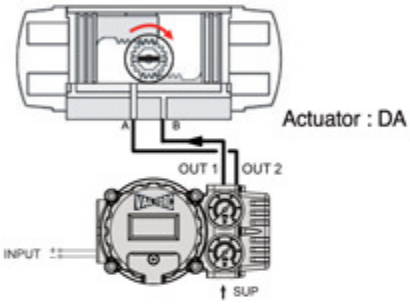
As the input signal increases, Actuator shaft rotates counter-clockwise	As the input signal increases, Actuator shaft rotates counter-clockwise	As the input signal increases, Actuator shaft rotates clockwise

	Spring Return	Double Acting
Reverse Acting	Out1 : piped, Out2 : plugged	Out1 : piped to Actuator port A, Out2 : piped to Actuator port B
Direct Acting	Out1 : plugged, Out2 : piped	Out1 : piped to Actuator port B, Out2 : piped to Actuator port A

WWW.VALTORC.COM
AJBENTAL@VALTORC.COM
1 (866) VALTORC

Front Cover Removed

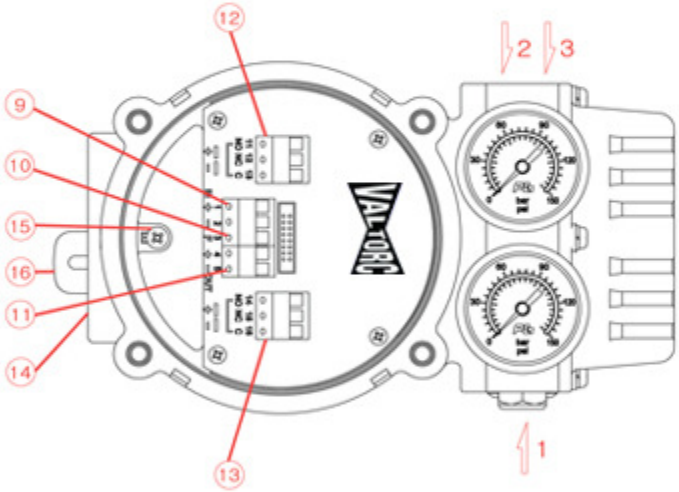

Front Cover

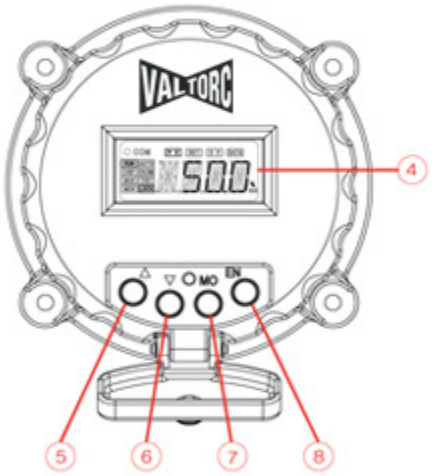

1 : Air supply
2 : OUT 1
3 : OUT 2
4 : Display LCD
5 : Up key
6 : Down key
7 : Mode key
8 : Enter key
9 : Input signal (+, -)
10 : Frame ground
11 : Output signal (+, -)
12 : Alarm limit 1
13 : Alarm limit 2
14 : Electrical connections
15 : Ground
16 : Feedback lever

Electrical Connections

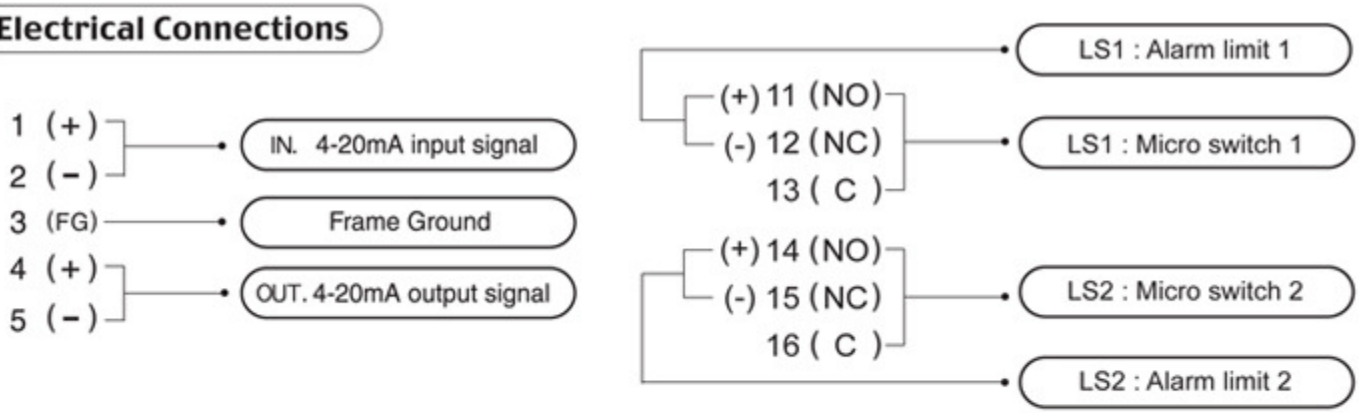

Characteristic Curves

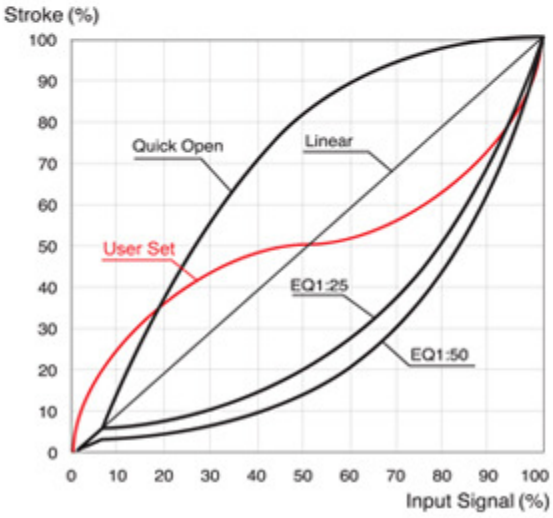

Quick Start and Checking

	Button	Action
Auto - Calibration	MO	Push 5 seconds for auto-calibration
Span	▽DN → ENT ▽DN or △UP ENT → MO	Push ▽DN 5 seconds to change a measured span (Try this option only when a valve doesn't reach a desired position)
Ambient Temp.	ENT	Confirm an ambient temperature surrounding this smart valve positioner

Parameters Diagram

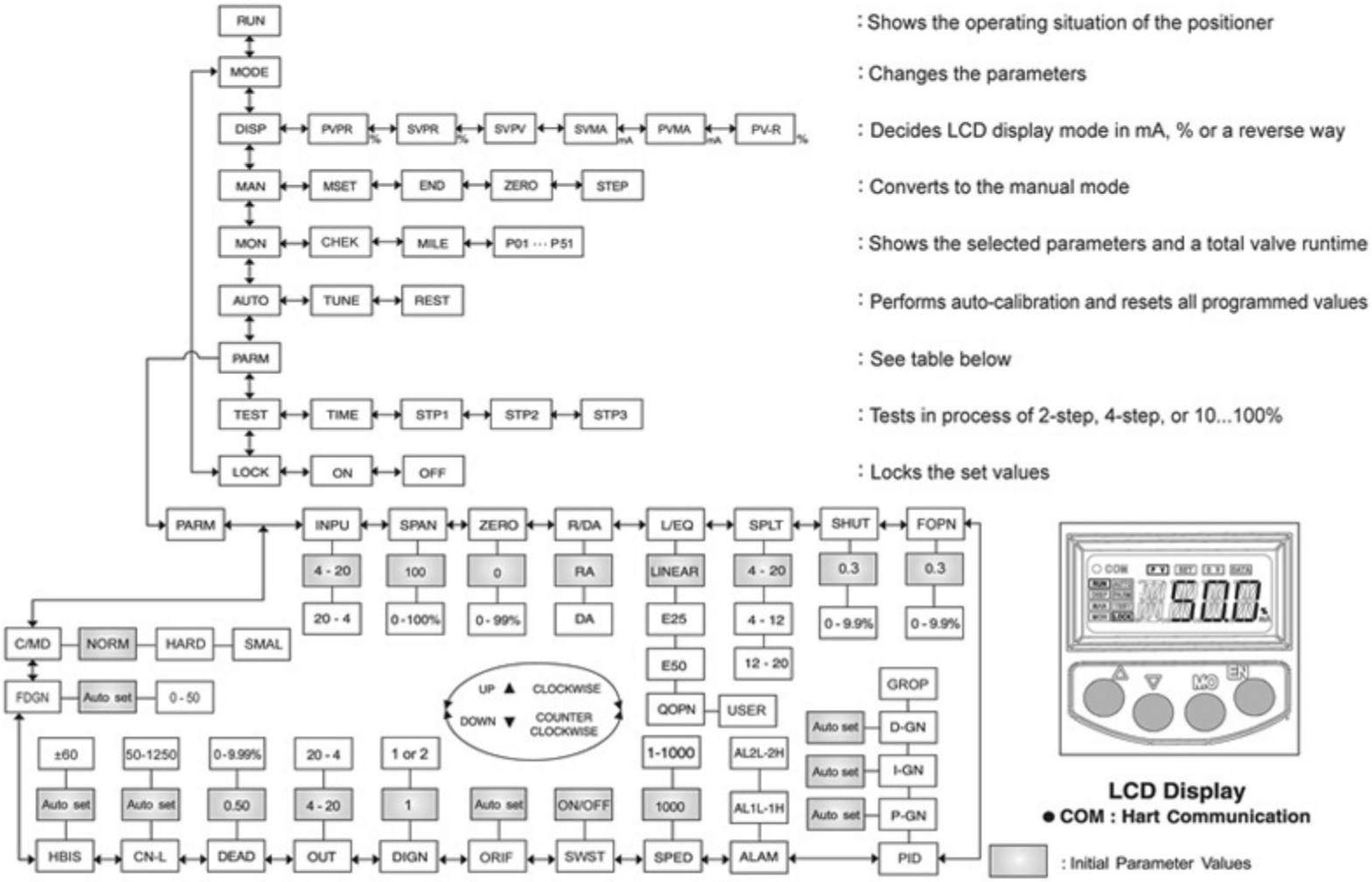

LCD Display

- **COM : Hart Communication**

Parameters	Descriptions	Functions	Initial value
INPU	Input signal	4 - 20mA or 20 - 4mA	4 - 20 mA
SPAN	Span range	0 - 100% span adjustment	0%
ZERO	Zero-up	Position Zero up and down 0 - 99%	0%
R / DA	RA / DA	Reverse or direct acting	RA
L / E.Q / QOPN / USER	Linear / E.Q% / Quick open / User set	Linear, E.Q%(1:25 or 1:50), Quick open, User set(17 points)	Linear
SPLT	Split range	4 - 12mA or 12 - 20mA	4 -20 mA
SHUT	Shut-off	Valve shut off at 0 - 9.9%	0.3%
FOPN	Full-open	Valve full open at 0 - 9.9%	0.3%
PID	P-Gain / I-Gain / D-Gain / Grop	Gain value	Auto setting
ALAM	Alarm limit low, high	AL1L / AL1H, AL2L / AL2H	Low (0 - 10%), High (90 - 100%)
SPED	Speed control	1 -1000	1000
SWST	Slow start	Valve slow start ON-OFF	Auto setting
ORIF	Orifice	Orifice value	Auto setting
DIGN	Display digit	Move to one or two decimal places	1
OUT	Output signal	4 - 20mA or 20 - 4mA	4 - 20 mA
DEAD	Dead zone	0 - 9.99%	0.5%
CN-L	Control limit	Control limit value at 50 - 1250	Auto setting
HBIS	HARD mode BIOS	Oscillation control value at -50 --- +50	Auto setting
FDGN	HARD mode fast D-Gain	HARD mode fast D-Gain	Auto setting
C/MD	NORM / HARD / SMAL	Standard operation, with hard friction for small valve	NORM

Wiring Alarm Limits

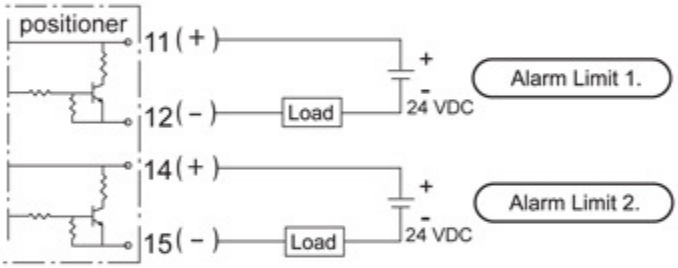

Note that 24 VDC should be supplied for power.

Micro Switches

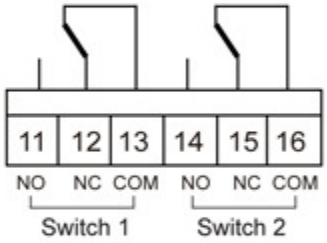

Measuring Output Signal

① With mA loop calibrator

② With mulitimeter (mA)

ZERO and SPAN of position feedback are automatically set after auto-calibration process.

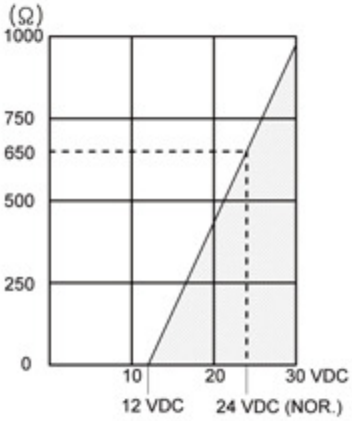

Transmitter Load Limitations

Micro Switches	
Type	SPDT
Rating	10.1A @ 250 VAC
Ambient Temperature	-25 ~ 85℃
Position Transmitter	
Output Signal	4 - 20 mA, 2-wire
Power Supply	12 - 30 VDC
Output Current Limit	30 mA DC
Linearity	±0.5% F.S
Operating Temp.	-20 ~ +80℃

WWW.VALTORC.COM
AJBENTAL@VALTORC.COM
1 (866) VALTORC

Dimensions

(Linear Type)

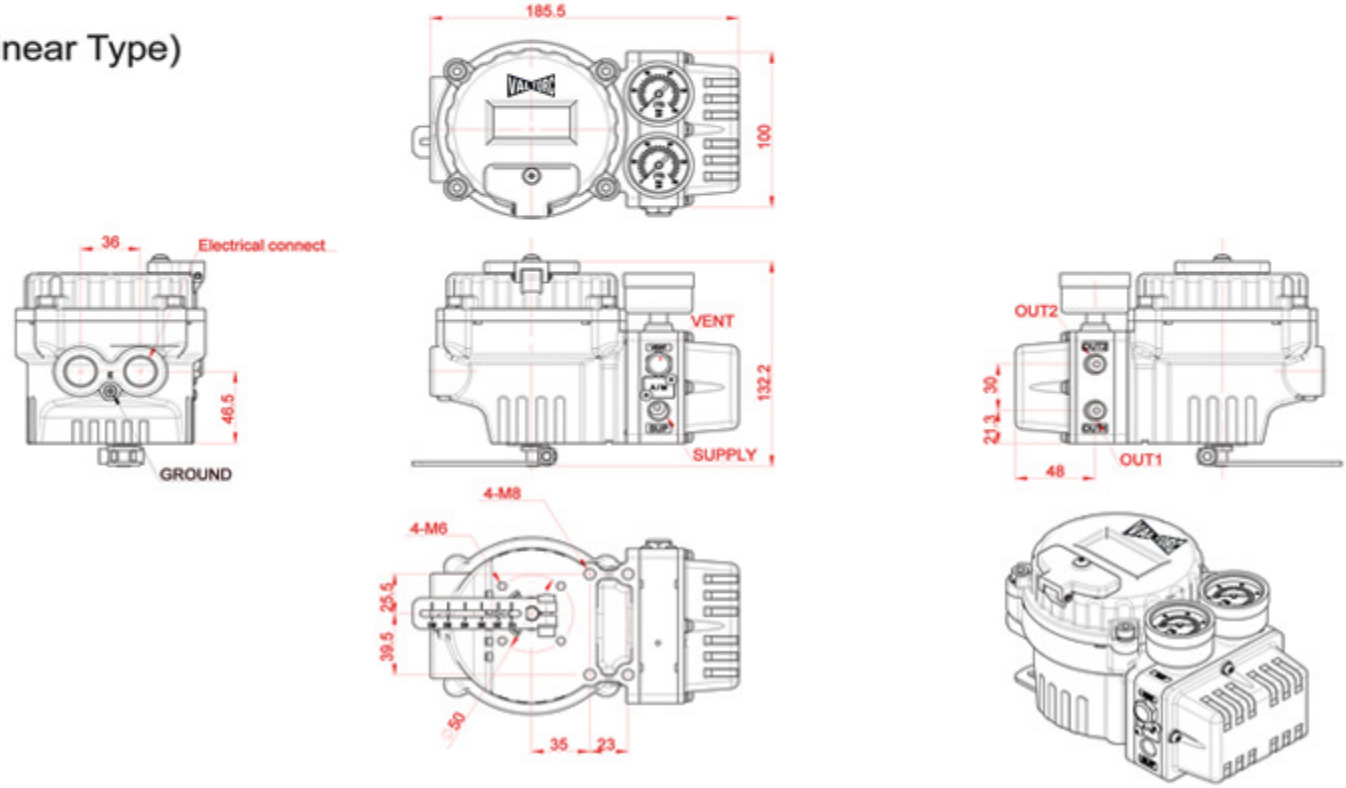

(Rotary Type)

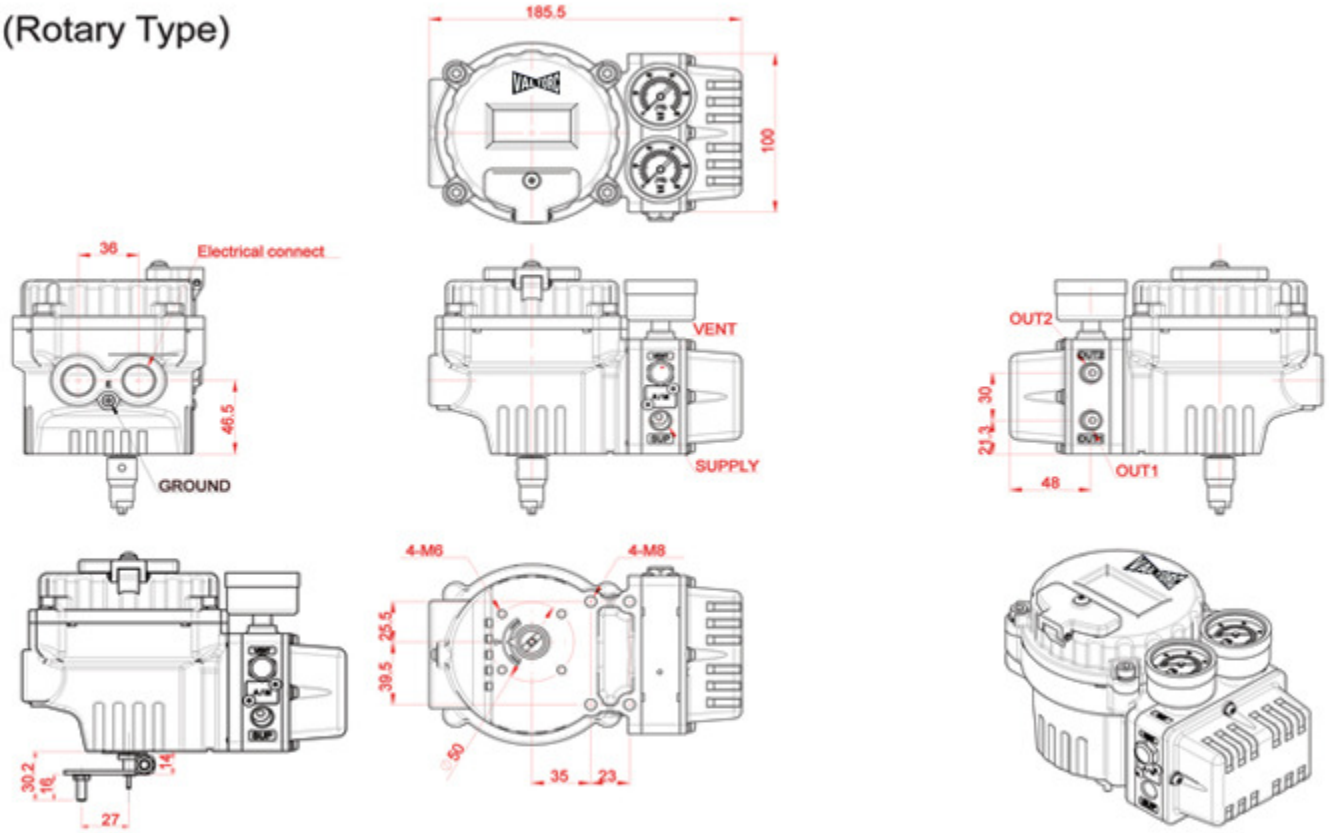

< Fork Lever Type >