WWW.VALTORC.COM
AJBENTAL@VALTORC.COM
1 (866) VALTORC

STAINLESS STEEL PNEUMATIC ACTUATORS

SERIES SSPA-10

CORROSION RESISTANT
IDEAL FOR SANITARY APPLICATIONS
FOOD, BEVERAGE, MEDICAL CHEMICAL ENVIRONMENTS

WWW.VALTORC.COM
AJBENTAL@VALTORC.COM
1 (866) VALTORC

1 STAINLESS STEEL BODY
The all-SS housing is ideal for sanitary, pulp and paper, marine and a variety of other applications where corrosion-resistance is crucial.

2 HEAVY-DUTY PINION
The one-piece stainless steel alloy shaft has precision machined gear teeth for precise operations.

3 BEARINGS
Replacable top and bottom TFE pinion bearings ensure low friction, stability up to 400°F and corrosion resistance.

4 TRAVEL STOPS
Travel adjustment of +/- 4° is available on all models.

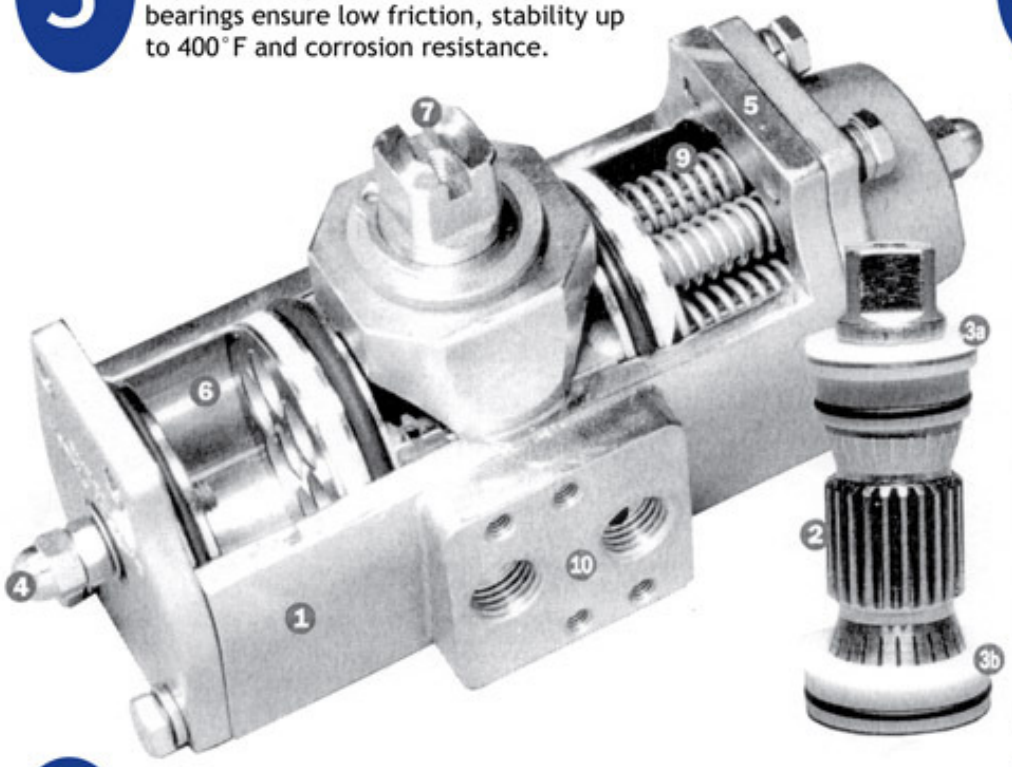

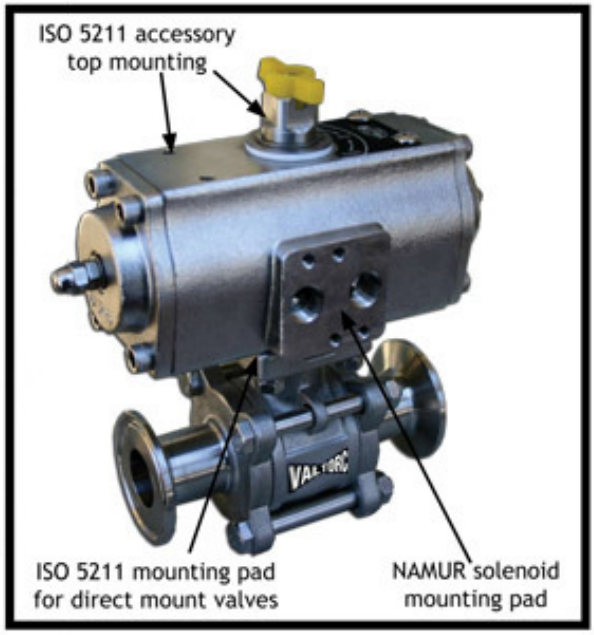

5 ACCESSORY MOUNTING
NAMUR and ISO mounting allows for the easy factory or field installation of solenoids, switches and positioners.

6 STAINLESS STEEL PISTONS
Durable, precision cast pistons provide full engagement with the pinion. Quality seals and guides provide high thrust stability with minimal friction.

7 NAMUR SHAFT
The slotted shaft, along with the NAMUR bolt pattern, allows for direct mounting of NAMUR standard switches and positioners.

8 ACTUATOR MOUNTING
ISO 5211 standard design provides direct mounting of most ISO pad valves.

9 SPRING CARTRIDGES
The heavy duty spring cartridges are designed for easy conversion of a double acting actuator to a spring return actuator, or to modify the torque output depending on air pressure.

10 SOLENOID MOUNTING
The SSPA series actuator is designed for direct mounting of NAMUR solenoid valves without additional piping.

WWW.VALTORC.COM
AJBENTAL@VALTORC.COM
1 (866) VALTORC

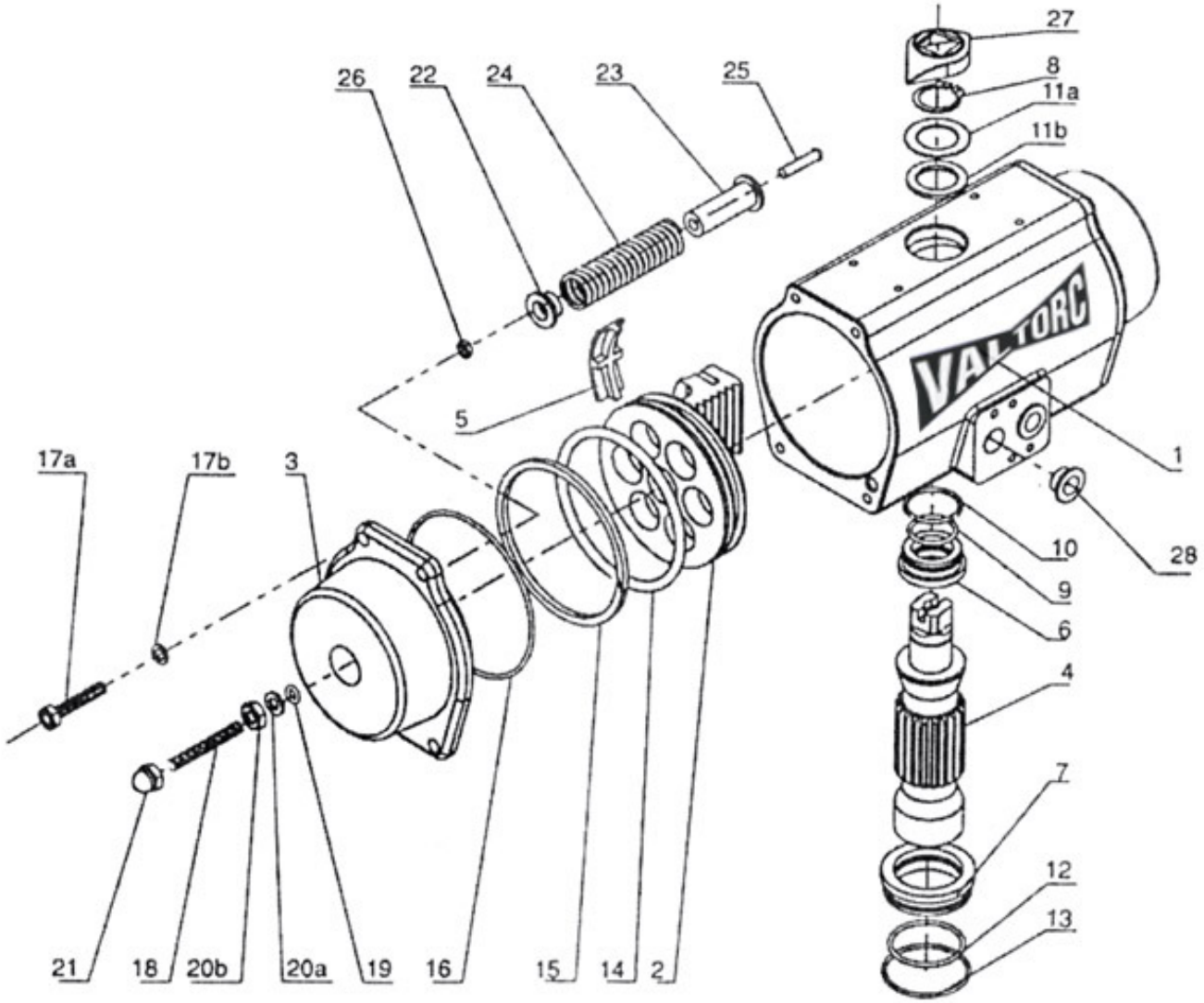

PART #	NAME	MATERIAL	QTY
1	BODY	SS	1
2	PISTON	SS	2
3	END CAPS	SS	2
4	PINION	SS	1
5	GUIDE BEARING	NYLON 6	1
6	PINION BEARING (TOP)	TFE	1
7	PINION BEARING (BOTTOM)	TFE	1
8	SNAP RING	SS	1
9	O-RING (INNER TOP)	VITON®	1
10	O-RING (OUTER TOP)	VITON®	1
11A	WASHER	SS	1
11B	BEARING	NYLON 6	1
12	O-RING (INNER BOTTOM)	VITON®	1
13	O-RING (OUTER BOTTOM)	VITON®	1
14	O-RING (PISTON)	VITON®	2

PART #	NAME	MATERIAL	QTY
15	PISTON BEARING	NYLON 6	2
16	O-RING (END CAP)	VITON®	2
17A	BOLTS (END CAP)	SS	8
17B	LOCK WASHER	SS	8
18	TRAVEL STOP	SS	2
19	O-RING (TRAVEL STOP)	VITON®	2
20A	WASHER	SS	2
20B	NUT (TRAVEL STOP)	SS	2
21	RETAINING NUT	SS	2
22	SPRING RETAINER	NYLON 6	*
23	SPRING	PLATED CS	*
24	SPRING	PLATED CS	*
25	SPRING SCREW	SS	*
26	SPRING NUT	SS	*
27	POSITION INDICATOR	NYLON	1
28	PORT PLUG	NYLON 6	2

WWW.VALTORC.COM
AJBENTAL@VALTORC.COM
1 (866) VALTORC

Spring Return Torque (in. lbs)

	SPRINGS PER SIDE	SPRING TORQUE		40 PSI		60PSI		80PSI		100PSI	
MODEL	(5 STD)	END	BREAK	END	BREAK	END	BREAK	END	BREAK	END	BREAK
SSPA-10-A	3	35	57	14	36	50	72	86	108	121	143
	4	47	77			30	60	66	96	101	131
	5	60	96					47	83	82	118
	6	71	115							63	107
SSPA-10-B	3	67	136	35	104	120	189	206	275	291	360
	4	90	182			74	166	160	252	245	337
	5	112	227					115	230	200	315
	6	135	273							154	292
SSPA-10-C	3	167	273	97	203	282	388	467	573	652	758
	4	223	364			191	332	376	517	561	702
	5	279	456					284	461	469	646
	6	335	547							378	590
SSPA-10-D	3	346	574	50	278	362	590	675	903	987	1215
	4	461	766			170	475	483	788	795	1110
	5	576	956					293	673	605	985
	6	692	1141							420	869
SSPA-10-E	3	651	1141	73	563	681	1171	1288	1778	1895	2385
	4	869	1522			300	953	907	1560	1514	2167
	5	1080	1902					527	1349	1134	1956
	6	1301	2283							753	1735
SSPA-10-F	3	808	1859	175	1226	1192	2243	2209	3260	3226	4277
	4	1071	2487			564	1980	1581	2997	2598	4014
	5	1345	3107					961	2723	1978	3740
	6	1610	3726							1359	3475
SSPA-10-G	3	1522	3098	4	1580	1555	3131	3106	4682	4657	6233
	4	2035	4133			520	2618	2071	4169	3622	5720
	5	2550	5169					1035	3654	2586	5205
	6	3054	6196							1559	4701

Double Acting Torque (in. lbs)

MODEL	40PSI	60PSI	80PSI	100PSI	120PSI
SSPA-11-A	71	107	143	178	214
SSPA-11-B	171	256	342	427	512
SSPA-11-C	370	555	740	925	1110
SSPA-11-D	624	936	1249	1561	1873
SSPA-11-E	1214	1822	2429	3036	3643
SSPA-11-F	2034	3051	4068	5085	6102
SSPA-11-G	3102	4653	6204	7755	9306

WWW.VALTORC.COM
AJBENTAL@VALTORC.COM
1 (866) VALTORC

Double Acting Actuators

ACTUATOR OVERVIEW

- All listed output torques are expressed in inch pounds of torque (in. lbs.).
- Charts for available air pressure are expressed in pounds per square inch (P.S.I.).
- VALTORC actuators offer ±4° adjustment in the open and closed positions on all models.

DOUBLE ACTING ACTUATOR SIZING (*PLEASE SEE DOUBLE ACTING TORQUE CHART*)

1. Establish the valve manufacturer's breakaway or seating/unseating torque, then add 20% as a safety factor (e.g. 115 in. lbs. valve breakaway torque x 20% = 138 in. lbs.).
2. Determine available air pressure to the actuator (e.g. 60 P.S.I.).
3. Refer to the chart, find the 60 P.S.I. column and scan down until a torque value greater than the valve torque is found (e.g. 141 in. lbs.). Then go to the left to determine the VALTORC model number.

NOTE: The VALTORC *double acting actuator has no torque drop through the full 90º stroke.*

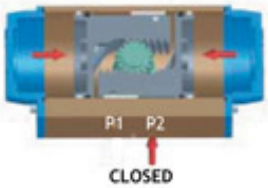

Air to Port 1 (P2) forces the pistons inwards, causing the pinion to turn clockwise.

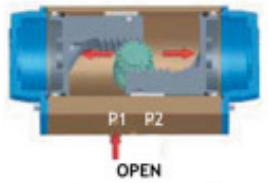

Air to Port 2 (P2) forces the pistons outwards, causing the pinion to turn counterclockwise.

Spring Return Actuators

SPRING RETURN ACTUATOR TERMINOLOGY

1. **AIR STROKE:** When air is supplied to the actuator, the pistons compress the springs. The greater the spring compression, the less torque output the actuator can supply.
2. **SPRING STROKE:** When air is removed from the actuator, the stored energy in the springs forces the pistons inward. At full compression, the spring is at its maximum torque output. This is the SPRING START. When springs are uncompressed, this is the SPRING END.
3. **FAIL POSITION:** Standard VALTORC actuators are preset for fail closed (CW) operation, but can be adjusted easily for fail open (CCW) rotation.

SPRING RETURN ACTUATOR SIZING (*PLEASE SEE SPRING RETURN TORQUE CHART*)

1. Establish the valve manufacturer's seating torque (closing) and breakaway torque (opening). Add a 20% safety factor (e.g. a valve torque of 80 in. lbs. x 20% = 96in. lbs.).
2. Refer to the spring torque column and select the SPRING END TORQUE that equals or exceeds the required valve torque (i.e. the VALTORC model 10-B with a 80# spring set, which has an **spring end** of 112 in. lbs. and a **spring start** of 186 in. lbs.).
3. Determine the available air line pressure to the actuator (e.g. 80 P.S.I.). Refer to the 80 P.S.I. column and scan down to where it intersects with the BI-60 with an 80# spring. In this case, the end spring torque is 112 in. lbs,. which exceeds the required 96 in. lbs. required.

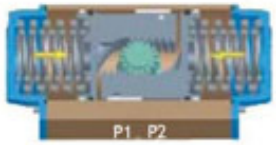

Loss of air pressure on Port 1 causes springs to drive the pistons inward. The pinion turns clockwise to close while air exhausts from Port 1.

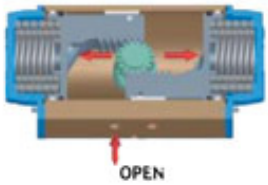

Air to Port 2 (P2) forces the pistons outwards, causing the springs to compress. The pinion turns counterclockwise.

SPRING SET COMBINATION OPTIONS

SPRING SET 01
(40PSI)

SPRING SET 02
(50PSI)

SPRING SET 05
(80PSI)

SPRING SET 03
(60PSI)

SPRING SET 04
(70PSI)

SPRING SETS

All SSPA-10 series (stainless steel) pneumatic actuators come standard with a complete spring pack (6 springs per side) sized for 80 PSI supply pressure unless otherwise specified. Actuators can be configured for different air supplies by removing springs from the end caps.

IMPORTANT: Springs must be arranged in a symmetrical manner (see arrangements to the left) so that side load does not occur between the pistons and the actuator body.

REVERSE OPERATION

All VALTORC actuators are set for a standard CW to close, CCW to open rotation. The action may be reversed by rotating the pistons 180°.

WWW.VALTORC.COM
AJBENTAL@VALTORC.COM
1 (866) VALTORC

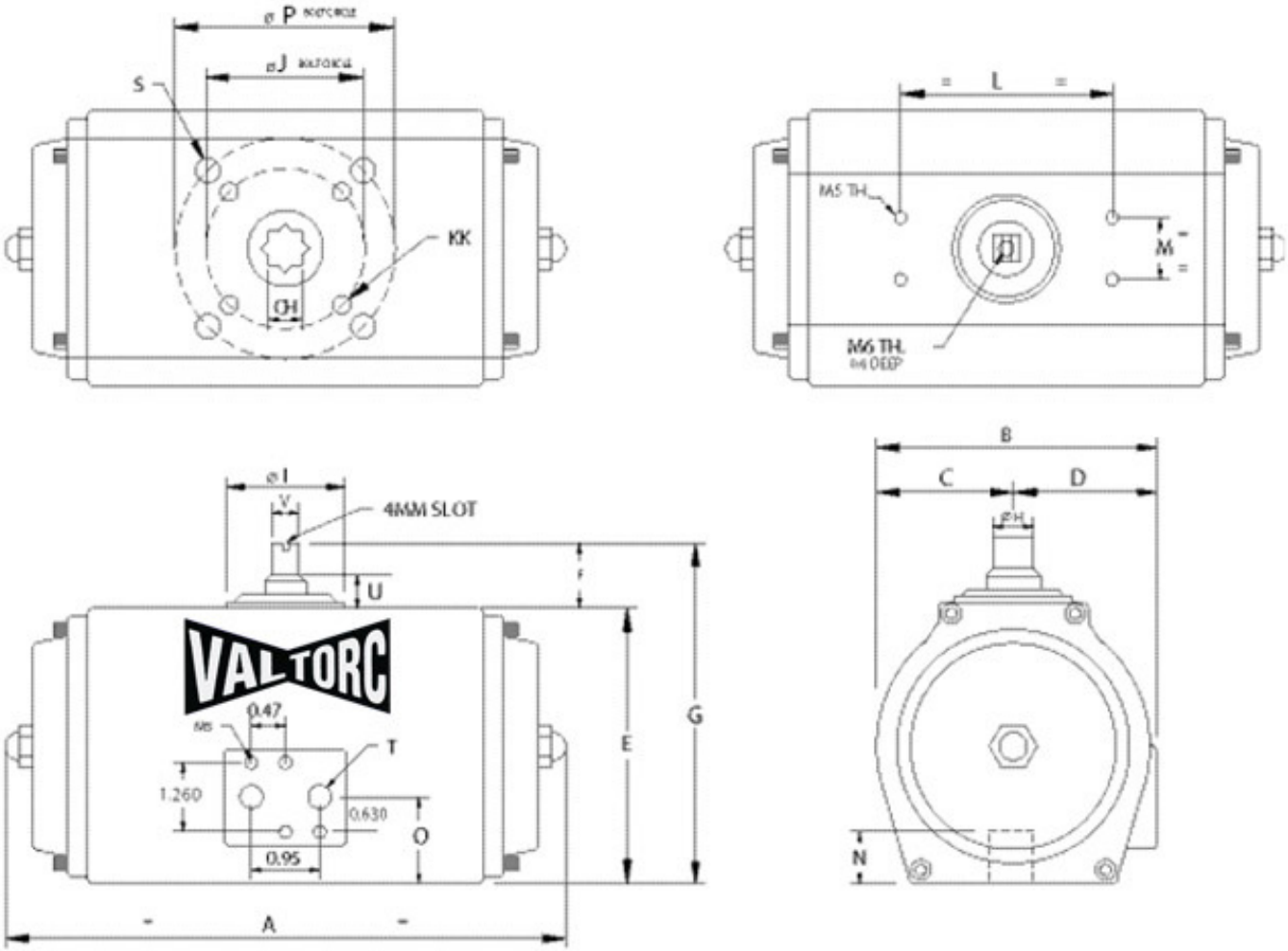

GENERAL DIMENSIONS

MODEL	A (DA)	A (SR)	B	C	D	E	F	G	CH	J
SSPA-10-A	6.54	7.56	2.56	1.15	1.15	2.56	0.787	3.34	0.433	1.42
SSPA-10-B	7.00	7.34	2.92	1.39	1.39	3.18	0.787	3.97	0.551	1.97
SSPA-10-C	7.81	8.37	3.97	1.91	1.91	4.24	0.787	5.03	0.748*	1.97
SSPA-10-D	9.91	10.53	4.75	2.29	2.29	5.23	0.787	6.02	0.748*	2.76
SSPA-10-E	11.66	12.20	5.39	2.69	2.69	6.09	1.181	7.27	0.866	2.76
SSPA-10-F	14.17	19.29	6.26	3.11	3.11	6.89	1.181	8.07	1.063	4.02

**Also available with 14mm and 17mm adapters*

MODEL	L	N	M	P	S	T	V	KK
SSPA-10-A	3.15	0.58	1.181	1.97	M6 x 10	1/4" NPT	0.633	M5 x 8
SSPA-10-B	3.15	0.59	1.181	N/A	M6 x 10	1/4" NPT	0.633	---
SSPA-10-C	3.15	0.66	1.181	2.76	M8 x 13	1/4" NPT	0.635	M6 x 10
SSPA-10-D	3.15	0.77	1.181	N/A	M8 x 13	1/4" NPT	0.629	---
SSPA-10-E	5.12	0.97	1.181	4.02	M10 x 16	1/4" NPT	0.865	M8 x 13
SSPA-10-F	5.12	1.18	1.181	4.92	M12 x 20	1/4" NPT	0.865	M10 x 16

ACTUATOR WEIGHTS

MODEL	DA LBS.	SR LBS.
SSPA-10-A	5.0	5.5
SSPA-10-B	8.0	8.5
SSPA-10-C	14	14.5
SSPA-10-D	25.5	27.0
SSPA-10-E	38.5	40.5
SSPA-10-F	63.5	65.5
SSPA-10-G	80.0	83.0

NOTE: Inserts and adapters are available for mounting to a variety of ISO and non-ISO mount valves.