SYSTEMATIC
CONTROLS
CORPORATION

WWW.SYSTEMATICCONTROLS.COM
AJBENTAL@VALTORC.COM
1 (866) 825-8672

SERIES MX7-10

Features

- Fuzzy
- Auto Tuning
- Alarm Output
- Retransmission Output
- Universal Input • Output
- Free Scale function (Voltage/Current Input)
- Ramp function
- Heating / Cooling
- Zone PID
- Group PID (1,2,3)
- Power supply for sensor (24VDC)
- Output Limits
- Interface (RS485 / 422)
- 3 Set points
- Heater break alarm
- IP65 front facia

INPUT

Input	Thermocouple: K, J, E, T, R, S, B, L, N, U, WRe 5-26, PL-Ⅱ R.T.D: Pt 100Ω, KPt 100Ω Direct voltage: 1~5V, -10~20mV, 0~100mV(Programmable scale type)
Sampling time	250mS
Input resolution	Below decimal point of measurement range
Input impedance	T/C and mV input: 1MΩ min., DC V: 1MΩ
Lead wire tolerable resistance	R.T.D: 10Ω max. / wire
Input tolerable voltage	±10V (T/C, R.T.D, Voltage: mV DC) ±20V (Voltage: V DC)
Noise removal rate	NMRR(normal mode): 40dB min. CMRR(common mode): 120dB min. (50/60Hz ±1%)
Standard	T/C, R.T.D: KS, IEC, DIN
Standard junction temp. compensation tolerance	±1.5℃(15~35℃), ±2.0℃(0~50℃)
Burn-out	T/C: OFF, Up/Down selectable R.T.D: Up scale (Detection current: 50nA)
Accuracy	±0.5% (Full scale)
Input range	Refer to "Input signal and Measurement range" T/C and R.T.D are changeable within range of input signal and measurement range. Voltage: min. voltage and max. voltage are available within range of measurement. Scaling available.

OUTPUT

① ALARM (HBA OUTPUT)

Relay contact output	Contact capacity: 240VAC 1A, 30V DC 1A(resistive load) Contact: 1a Output points: Refer to "Terminal Arrangement"
Heater break alarm	Point: 1 point (NX2, NX3, NX4, NX7, NX9) Current measurement range: AC 1~50A (resolution: 0.5A, ±5% ±1digit of F.S) Alarm output: Selectable in Alarm types Deadband : 0~100% of max. range · HBA is available when On/Off control or proportional output (but, when current output or cooling control, HBA is not available) · Break detection is not possible in 0.2 sec. when output on.

FUNCTION

Measurement input	Input correction (Bias): -100.0~100.0% for instrument range Scaling : According to SH, SL of measurement range Filter : OFF, 1~120 sec.
Control	3 settings (SV1, SV2 and SV3) and P.I.D setting each Auto tuning : According to set value (Standard type, Low PV type) Proportional Band : 0.1~999.9% (Max. range), 0.0~999.9% (When heating · cooling control) Integral Time : OFF, 1~6000 sec. Derivative Time : OFF, 1~6000 sec. ON/OFF control: By selecting output code (OT) " 0 " P.I.D selection : Zone PID/Segment PID selectable Manual Reset : -5.0~105.0% of output (valid when I= OFF) Direct / Reverse action : Changeable by parameter Preset output limit : -5.0~105.0% of output value, 0.0~105.0% when heating, cooling control ON/OFF hysteresis (HYS): 0.0~100.0% of instrument range (valid when ON/OFF control) Heating-Cooling hysteresis : -100.0~50.0% of output value A.R.W(Anti Reset Wind-up): AUTO, 50.0~200.0% Fuzzy : selection ON/OFF by parameter
Retransmission output	Signal : Process value(PV), Set value(SV), Output value(MV) Scaling : PV, SV
Alarm output	Set point : Refer to terminal arrangement Multi-alarm : High/Low process alarm, High/Low deviation alarm, Hold function of alarm, Heater break alarm (H.B.A) Setting range : Process alarm ····· 0~100% of instrument range Deviation alarm ····· -100~100% of instrument range Alarm hysteresis : 0.0~100.0% of instrument range

② RETRANSMISSION OUTPUT

Current output	Current output range: 4~20mA DC Resistive load: 600Ω max. Accuracy: ±0.5% of max. scale (4~20mA range) Resolution: Approx. 3,000 Output ripple: 0.3% (P-P) max. of scale (150Hz) Sampling: 250mS

③ CONTROL OUTPUT

Relay contact output	Contact capacity: 240VAC 3A, 30VDC 3A (resistive load) Contact: 1C Output operation: P.I.D control, ON/OFF Proportional cycle: 1~1.000 sec. Output limit: 0.0~100.0% range, higher limit(OH) or lower limit(OL) selectable (valid when AT) ON/OFF hysteresis: 0~100%(Full scale) Time resolution: 0.1% or 10mS
SSR drive voltage output	ON voltage 24VDC min.(resistive load 600Ω min., 30mA limit when short) OFF voltage: 0.1VDC max. Proportional cycle: 1~1.000 sec. Output operation: P.I.D control Output limit: 0.0~100.0% range, higher limit(OH) or lower limit(OL) selectable (valid when AT) Time resolution: 0.1% or 10mS
Current output	Current output range: 4~20mA DC Resistive load: 600Ω max. Accuracy: ±0.5% of full scale (4~20mA range), Resolution: Approx. 3,000 Output ripple: 0.3%(P-P) of max. scale (150Hz) Sampling time: 250mS Output operation: P.I.D control Output limit: -5.0~105.0% range, higher limit(OH) or lower limit(OL) selectable (valid when AT)

(Unit : mm)

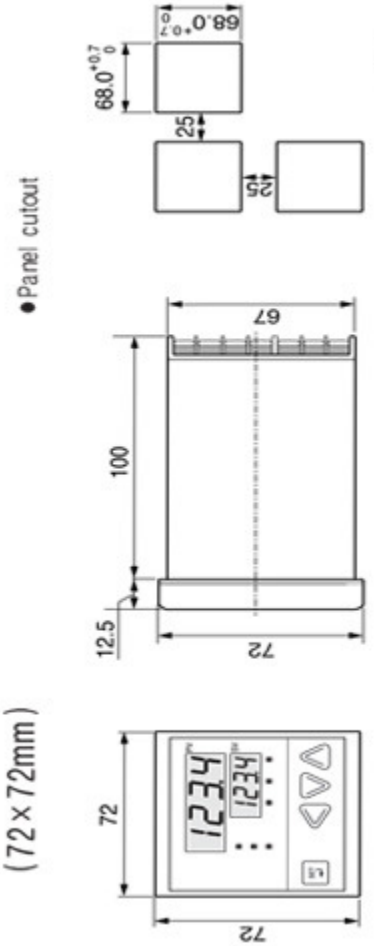

POWER SUPPLY

Power supply	100~240VAC(90~264VAC)	24V AC • DC(will be available in May,2000)
Frequency	50/60Hz	
Power consumption	6.0W max., 10VA max.	
Insulation resistance	Between primary terminal and secondary terminal : DC 500V, 20MΩ min. Between primary terminal and ground : DC 500V, 20MΩ min. Between ground and secondary terminal : DC 500V, 20MΩ min.	
Dielectric strength	Between primary terminal and secondary terminal : 2,300VAC 50/60Hz for 1 min. Between primary terminal and ground : 2,300VAC 50/60Hz for 1 min. Between F・G and secondary terminal : 1,500VAC 50/60Hz for 1 min.	
Power supply for sensor	24VDC 20mA (But, it is not available in retransmission output)	

INTERFACE

Standard	EIA RS485
Communication address	0~31, 1~99 setting available
Communication method	2 wire half duplex or 4 wire half duplex
Synchronization	Start-stop synchronous mode
Communication sequence	None
Communication distance	1.2Km max.
Communication speed	600, 1200, 2400, 4800, 9600 BPS (Speed is changeable by parameter)
Start bit	1 BIT
Data bit	7 or 8 BIT
Parity bit	None, even numbers, odd numbers
Stop bit	1 or 2 BIT
Communication protocol	PC LINK WITHOUT SUM(0), PC LINK WITH SUM(1)
Response time	Reception treatment time + (Response time × 10mS)

INPUT SIGNAL and MEASUREMENT RANGE

Input type (Input signal)		Input code	Range (℃)	Range(℉)	Accuracy	Remarks
Thermocouple (T.C)	K ※2	1	-200~1370	-300~2500	±0.5% of F.S ±1digit	• F.S is maxium value ~ minimum value of each RANGE. • Digit is minimum value of display ※1 0~400℃ : ±10% of F.S±1digit ※2 0℃ and below : ±1.0% of F.S±1digit ※3 -150.0~150.0℃ range : ±1.0% of F.S±1digit ※ 20 → KPt100 ※ 21 → DPt100
	K ※2	2	-199.9~999.9	0~2300		
	J ※2	3	-199.9~999.9	-300~2300		
	E ※2	4	-199.9~999.9	-300~1800		
	T ※2	5	-199.9~400.0	-300~750		
	R ※2	6	0~1700	32~3100		
	B ※1	7	0~1800	32~3300	±0.5% of F.S ±1digit	
	S	8	0~1700	32~3100		
	L ※2	9	-199.9~900.0	-300~1300	±0.5% of F.S ±1digit	
	N	10	-200~1300	-300~2400	±1.0% of F.S ±1digit	
	U ※2	11	-199.9~400.0	-300~750	±0.5% of F.S ±1digit	
	W	12	0~2300	32~4200		
	Platinel Ⅱ	13	0~1390	32~2500		
R.T.D	KSPt100 ※3	※ 20	-199.9~500.0	-199.9~999.9	±0.5% of F.S ±1digit	
	Pt100 ※3	※ 21	-199.9~640.0	-300~1180		
Direct voltage (VDC/mVDC)	1~5V	30	1~5V			
	-10~20mV	32	-10~20mV			
	0~100mV	33	0~100mV			
Direct voltage (mV)	DC 4~20mA	※ 30	※ When using current input, use the resistor 250Ω 0.1% on input terminal.			

MX7-10 (72×72mm)

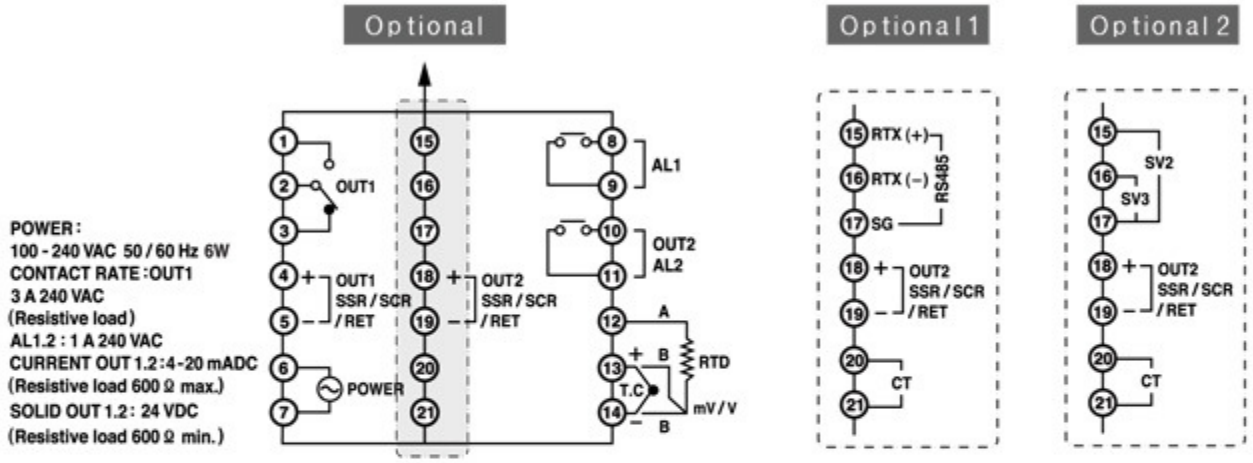

SYSTEMATIC CONTROLS CORPORATION

WWW.SYSTEMATICCONTROLS.COM
AJBENTAL@VALTORC.COM
1 (866) 825-8672

A SHORT VISIT TO OUR PLANT...

TRAINING CENTER

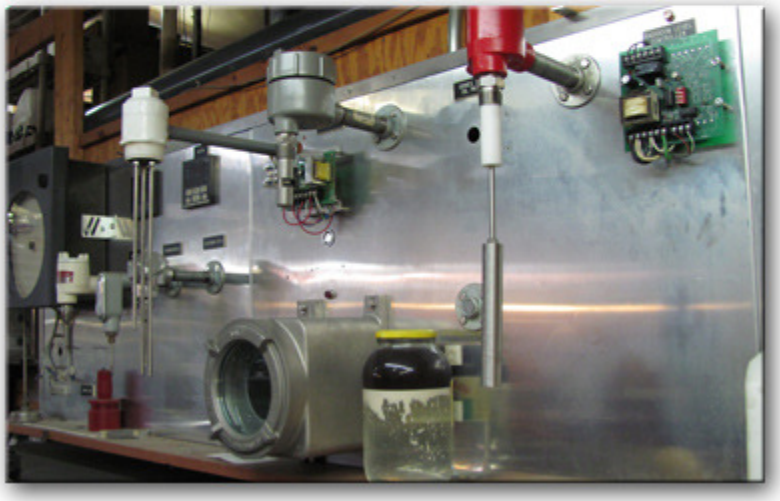

THE PICTURE TO THE TOP LEFT SHOWS PART OF OUR COMPLETE, SOPHISTICATED AND MODERN TRAINING FACILITY LOCATED IN OUR MAIN PRODUCTION AREA. VISITORS CAN SIMULATE LIVE APPLICATIONS UNDER DIFFERENT CONDITIONS, AND LEARN FAST ABOUT OUR PRODUCTS. CONTACT US FOR SEMINAR DATES.

TEST AREA

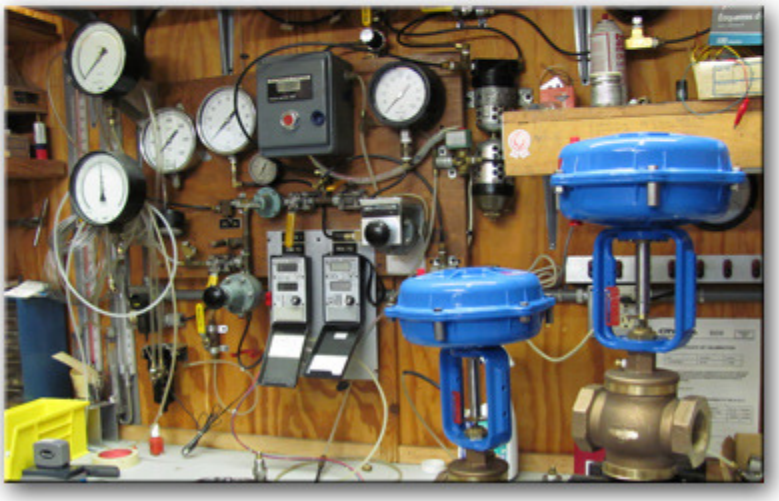

THE PICTURE TO THE TOP RIGHT SHOWS THE PRESSURE CALIBRATION STATION. MECHANICAL AND DIGITAL ELECTRONIC TEST INSTRUMENTS HAVE AN ACCURACY OF 0.1% FSD AND ARE TRACEABLE TO NIST STANDARDS IN CALIBRATION AND ACCURACY.

OTHER PRODUCTS SUPPLIED BY SYSTEMATIC CONTROLS

CONTROL VALVES

ELECTRONIC TRANSDUCER

TEMPERATURE CONTROLS

AUTOMATION PACKAGES

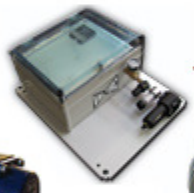

POULTRY SCALDER

RTD & THERMOCOUPLE

Let's plug you into the world of process controls, electronics and automation.
We have what it takes to do it all!