WWW.VALTORC.COM
SALES@VALTORC.COM
1 (866) VALTORC

Overview

Our V-Ball, V-Port and V-Notch ball valves are made in the USA. The V-ball, V "notch" is an exclusive design that allows precise flow with the ability to modulate and control the flow with 30°, 60°, or 90° degree V "notches". The V-Ball valve is a low maintenance valve with a tight bubble shut off feature. All valves have high manageability with the ability to work in high temperature (up to 1000°F) and in pressures as high as 500PSI (liquids) and 150PSI in steam.

Application

Pulp and Paper/Waste Water Treatment/ Food and Beverage/Chemical Plants/ Power Plants/ Steel Industry/Etc.

1. Design Features

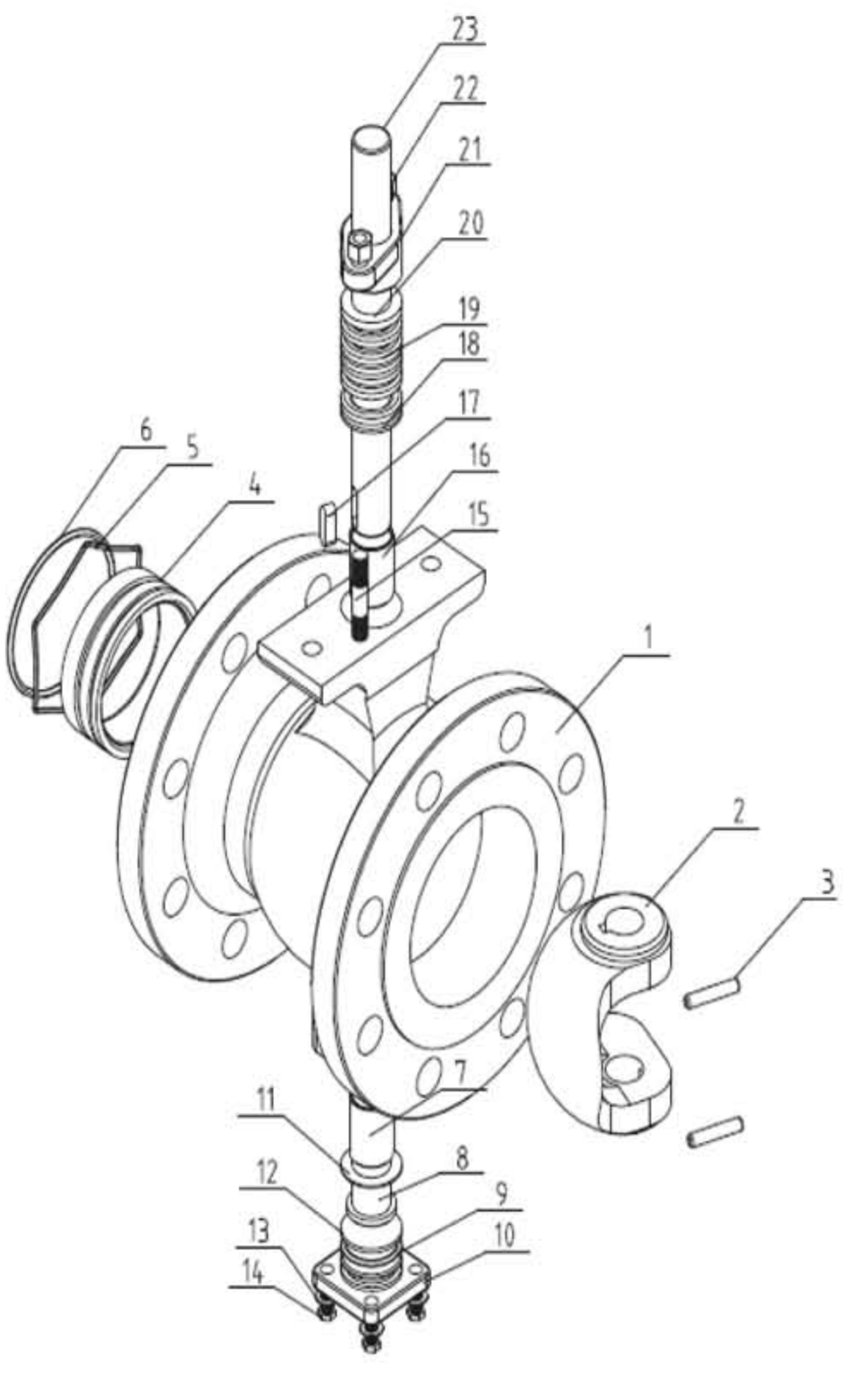

STANDARD PART LIST			
Parts	**WCB**	**CF8**	**CF8M**
1. Body	WCB	CF8	CF8M
2. V-port Segment	CF8+HCr	CF8+HCr	CF8M+HCr
3. Pin	304	304	316
4. Seat	304+STL	304+STL	316+STL
5. Spring	316L		
6. O-ring	VITON		
7. Bearing	304+PTFE	304+PTFE	316+PTFE
8. Lower Stem	304	304	316
9. O-ring	Viton		
10. Packing Gland	WCB	CF8	CF8M
11/12. Gasket	PTFE		
13. Washer	Q235	304	316
14/15 Bolt	25	304	304
16. Bearing	304+PTFE	304+PTFE	316+PTFE
17. Key	304	304	316
18/19/20. Packing	PTFE or Graphite		
21. Packing Gland	WCB	CF8	CF8M
22. Nut	Q235	304	304
23. Upper Stem	304	304	316

Body

- Single-piece body prevents leaks caused by separate flanges or locking rings.

V-port Segment Ball:

- Specially designed V-notch ball provides strong cutting stress and tight sealing. Well ground notched ball surface ensures small operating torque and tight seal, especially for metal seated segment valve.

Seat

- Special seat design eliminates cavity between seat and valve body. This, consequently, prevents media from jamming between seat and body, ensure reliable sealing.

Seal Surface

- Nitriding/Tungsten Carbide/Stellite Alloy/Nickle Base Alloy plating are available for abrasive media.

Stem

- Stem is finely grounded to match actuator excellently, which prevents rocking motion and potential failure of the v-port segmented valve.
- Close-fit spline or pin-key are available for stem-segment ball connection to provide reliable transmission without motion lost or dead band.

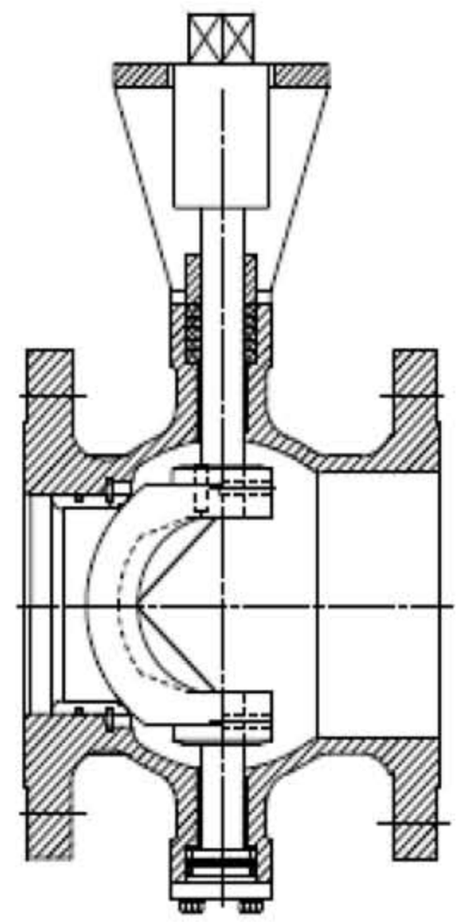

Flow Direction →

2. Technical Specification

Size Range

1" ~20" (DN25~DN500)

Pressure Rate

DIN PN10, 16, 25, 40,63; ANSI 150,300,600

Body Material

WCB, CF8, CF8M, CF3M, etc.

Ball/Seat:

Metal Seat

CF8+HCr/304+STL, CF8M+HCr/316+STL, CF3+HCr/304L+STL, etc.

Nitriding/Tungsten Carbide/Satellite Alloy/Nickle Base Alloy plating are available for abrasive media.

Soft Seat

Devlon/PEEK/PCTFE are available

End Connection

Flange Type

Face to Face

ISA S75.04, IEC/DIN 534-3-2

Temp. Range:

-29℃ ~ 240℃ with Soft Seat

-29℃ ~ 350℃ with Metal Seat

Seal Tightness:

Metal Seat

Class V (standard), Class VI (with Tungsten Carbide coated trim)

Soft Seat

Class VI

Valve Trim Rotation

Clockwise to close

Flow Characteristic

Equal Percentage

3. Flow Characteristic

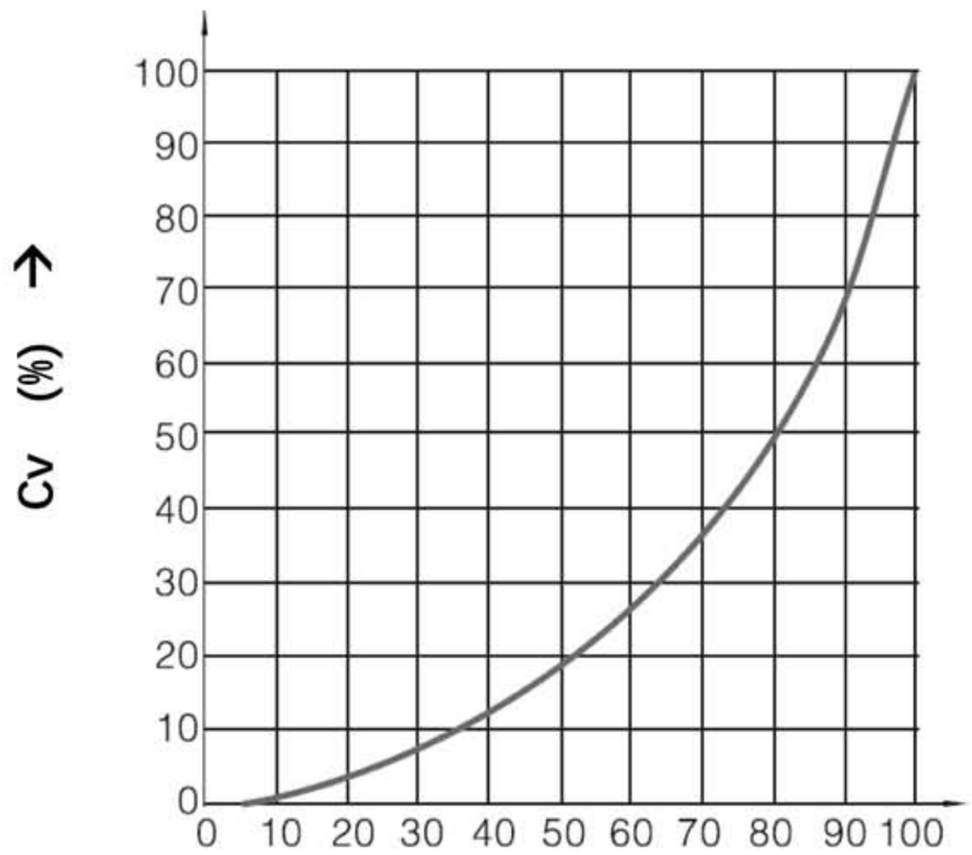

Size	CV
DN25	36
DN32	56
DN40	94
DN50	152
DN65	262
DN80	358
DN100	540
DN125	906
DN150	1424
DN200	2176
DN250	3532

Size	CV
DN300	5732
DN350	8245
DN400	10651
DN450	12878
DN500	16343

***The rated Cv value is for reference only.**

4. Seat Options

Metal Seat A

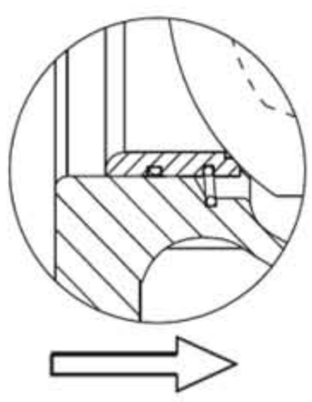

Flow Direction

Metal Seat B

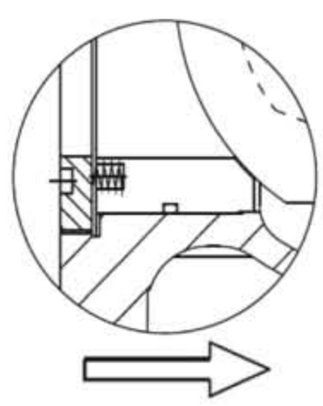

Flow Direction

High Temp Metal Seat C.

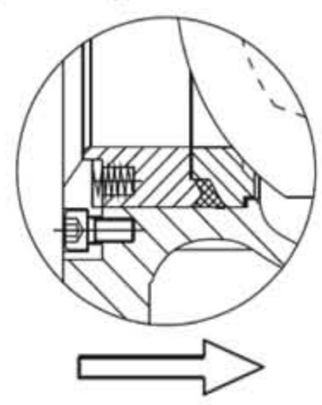

Flow Direction

Soft Seat D

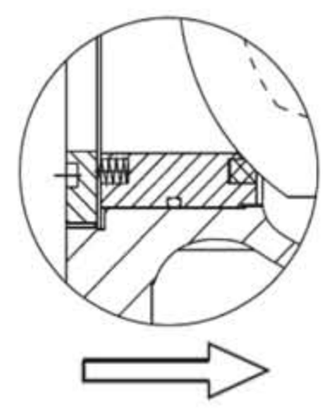

Flow Direction

Metal Seat A/ Metal Seat B

Seat	304/316+STL	
Spring	17-7PH/316L	
O-ring	Viton	High Temp. Viton
Packing	PTFE	Graphite
Temp. Range	-29~150℃	-29~220℃

High Temp Metal Seat C

Seat	304/316+STL
Spring	17-7PH/316L
O-ring	Graphite
Packing	Graphite
Temp. Range	-29~350℃

Soft Seat D

Seat	DEVLON	PCTFE	PEEK	
Spring	17-7PH/316L			
O-ring	Viton			
Packing	PTFE			Graphite
Temp. Range	-29~120℃	-29~120℃	-29~150℃	-29~240℃

5. Valve Torque (1.3 Safety Factor)

Size	PN16 10 Bar Pressure Metal Seat	PN16 10 Bar Pressure Soft Seat	PN25 20 Bar Pressure Metal/Soft Seat	PN40 30 Bar Pressure Metal/Soft Seat	PN63 50 Bar Pressure Metal/Soft Seat
DN25	20	20	30	70	150
DN32	25	25	36	90	230
DN40	30	30	40	140	270
DN50	35	35	42	150	520
DN65	50	50	62	300	640
DN80	60	80	95	300	640
DN100	80	120	140	420	900
DN125	110	180	220	600	1600
DN150	170	300	360	950	1600
DN200	240	500	590	1500	2700
DN250	430	900	1100	2300	4700
DN300	600	1400	1500	3500	7000
DN350	1200	2000	2500	6200	9300
DN400	1800	3200	4000	7200	13000
DN450	3000	4500	5600	11000	17300
DN500	4600	6500	8200	12500	22000

Size	150LB 10 Bar Pressure Metal Seat	150LB 10 Bar Pressure Soft Seat	150LB 20 Bar Pressure Metal/Soft Seat	300LB 35 Bar Pressure Metal/Soft Sea	600LB 70 Bar Pressure Metal/Soft Sea
DN25	20	20	30	85	210
DN32	25	25	36	105	320
DN40	30	30	40	180	380
DN50	35	35	42	190	730
DN65	50	50	62	380	930
DN80	60	80	95	380	1000
DN100	80	120	140	530	1000
DN125	110	180	220	720	2200
DN150	170	300	360	1180	2500
DN200	240	500	590	1750	3800
DN250	430	900	1100	2800	6500
DN300	600	1400	1500	4000	10000
DN350	1200	2000	2500	7800	13100
DN400	1800	3200	4000	9000	18000
DN450	3000	4500	5600	13700	24000
DN500	4600	6500	8200	15500	31000

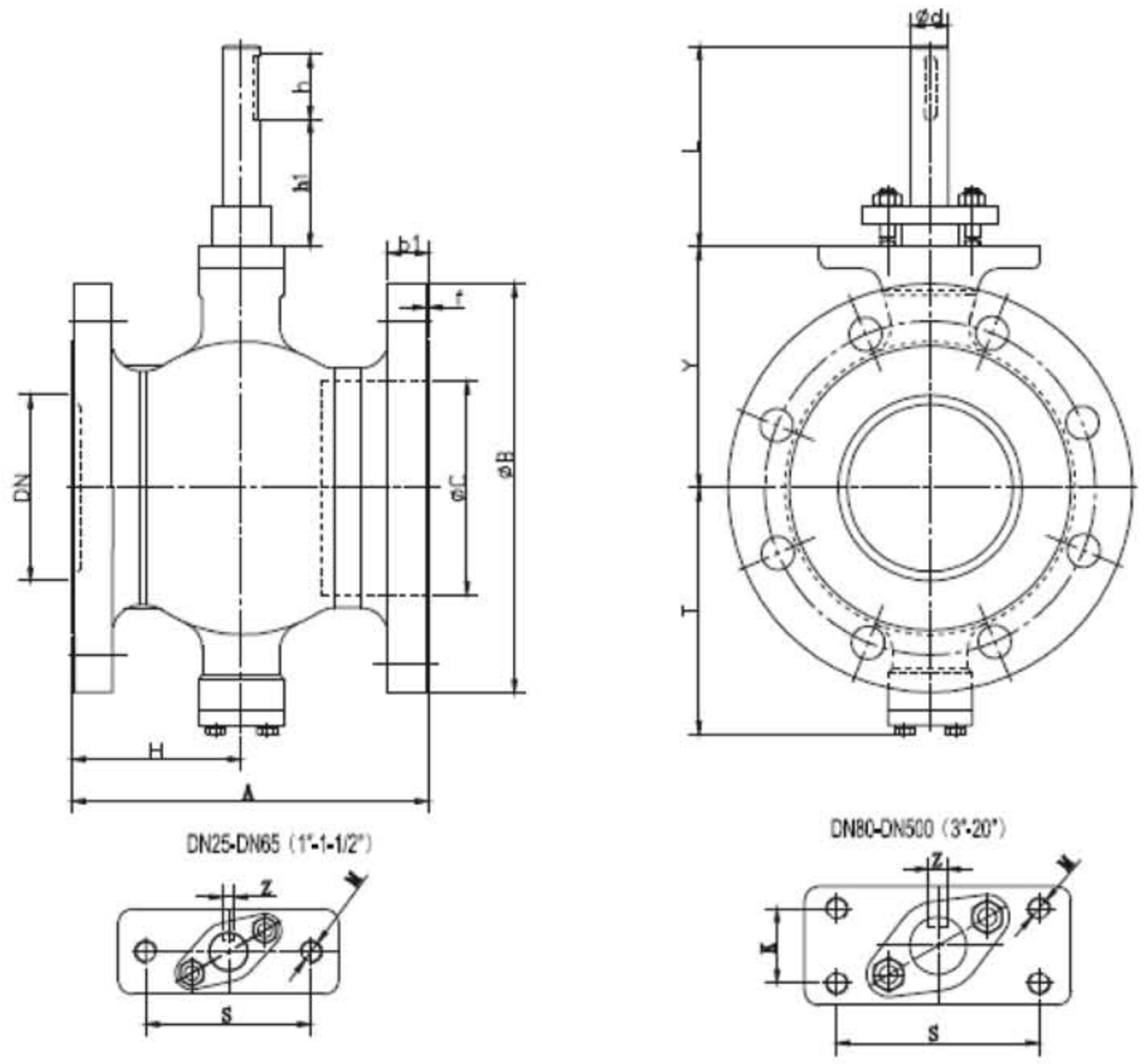

ANSI 150

DN	A	B	b1	f	C	T	Y	L	d	h	S	K	M	Z	Weight (kg)
1”	102	108	14.5	2	38	81	73	75	16	35	75	/	2-M10	5	5.4
1 1/4”	102	115	14.5	2	45	86	78	75	16	35	75	/	2-M10	5	7.3
1 1/2”	114	127	14.5	2	50	90	80	75	16	35	75	/	2-M10	5	8.4
2”	124	152	16.3	2	62	93	90	75	16	35	75	/	2-M10	5	10.5
2 1/2”	145	180	18	2	73	108	105	75	16	35	75	/	2-M10	5	13.2
3”	165	191	19.5	2	90	123	118	75	20	35	90	28	4-M10	6	17.7
4”	194	230	24	2	115	138	130	75	20	35	90	28	4-M10	6	24.7
5”	194	255	24.3	2	134	148	145	80	25	40	90	28	4-M10	8	34.5
6”	229	280	26	2	164	170	170	94	30	50	110	40	4-M12	8	50.7
8”	243	340	29	2	206	200	201	94	30	50	110	40	4-M12	8	72.7
10”	297	405	30.6	2	260	240	237	98	40	60	135	40	4-M16	12	116
12”	338	485	32.2	2	316	286	282	98	40	60	135	40	4-M16	12	169
14”	400	535	35.4	2	372	330	337	125	50	60	140	64	4-M16	14	249
16”	400	595	37	2	420	367	372	172	60	80	170	80	4-M20	18	326
18”	520	635	40.1	2	470	422	432	172	70	90	190	90	4-M24	20	410
20”	600	700	44	2	516	490	498	180	80	100	190	90	4-M24	22	510