WWW.VALTORC.COM
SALES@VALTORC.COM
1 (866) VALTORC

TEFLON COATED BUTTERFLY VALVE
SERIES 1900 - WAFER AND LUG STYLE

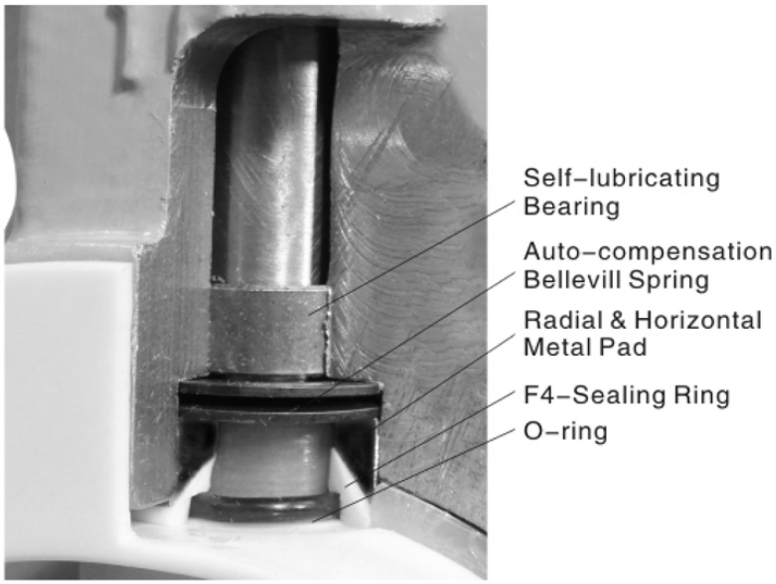

Applicable Field And Medium

Chemical Work	Sulfuric Acid, Nitric Acid, HydrochloricAcid, Acetic Acid ,Phosphoric Acid
Food Factory	Beer, Wine, Sauce, Chocolate
Pharmaceutical Factory	Vitamin Drugs, Calcium Chloride
Gas Factory	Hydrogen Sulfide, Sulfurous Acid Gas(dry/wet)
Solvent Factory	Methanol, Benzene, Dimethylbenzene, Ethyl Acetate, Methyl Ethyl Ketone

Performance Standard

Nominal Diameter	50~900mm
End Flanged Standard	JIS 10K ASME 125/150Lb
Max. Working Pressure	1.0Mpa-liquid 0.25Mpa-gas
Temperature Range	-20℃~150℃
Seal Testing Pressure	1.1Mpa-water 0.3Mpa-gas
Shell Testing Pressure	1.5MPa
Driving Mode	Operation with Handle ,Worm gear, Pneumatic， Electric
Main parts material	BODY： WCB DISC： WCB+PFA STEM： ASTM1045 SEAT： PTFE
Painting	Epoxy Painting

DIMENIONS AND WEIGHT
NPS 2"–12"

(wafer type)

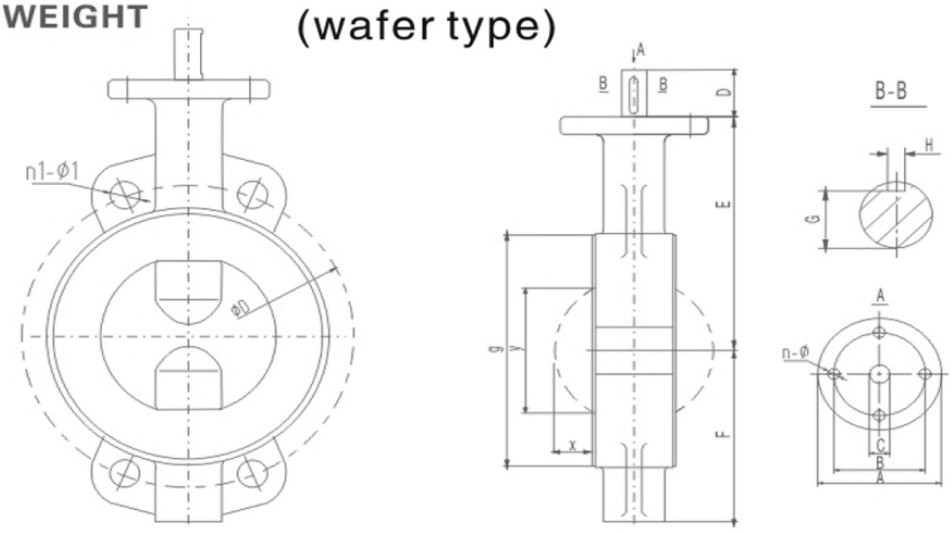

NPS	A	B	C	D	E	F	G	H	N–ø	L	G	X	Y	Weight
2″	77	57	12.6	27	115	60	10.9	3	4–ø10	52	100	9	42	2.2
2–1/2″	77	57	12.6	27	115	60	10.9	3	4–ø10	52	100	9	42	2.2
3″	92	70	12.6	32	150	86	10.9	3	4–ø10	46	135	18	66	4.2
4″	92	70	15.9	32	160	115	12.9	5	4–ø10	52	158	25	85	6.4
5″	92	70	15.9	32	175	130	12.9	5	4–ø10	56	185	35	112	7.9
6″	115	89	22.2	45	192	145	19.2	5	4–ø14	56	210	48	139	10.4
8″	115	89	22.2	45	220	175	19.2	5	4–ø14	60	263	69	187	17
10″	140	108	31.8	50	275	215	28	8	4–ø14	68	320	90	237	25
12″	140	108	31.8	50	310	250	28	8	4–ø14	78	368	112	290	34.5

NPS		ØD	N1–ø		ØD	n1–ø1
2″	10K	120	4–19	150lb	120.7	4–19
2–1/2″		140	4–19		139.7	4–19
3″		150	8–19		152.4	4–19
4″		175	8–19		190.5	8–19
5″		210	8–23		215.9	8–22
6″		240	8–23		241.3	8–22
8″		290	12–23		298.5	8–22
10″		355	12–25		362	12–25
12″		400	16–25		431.8	12–25

(lug type)

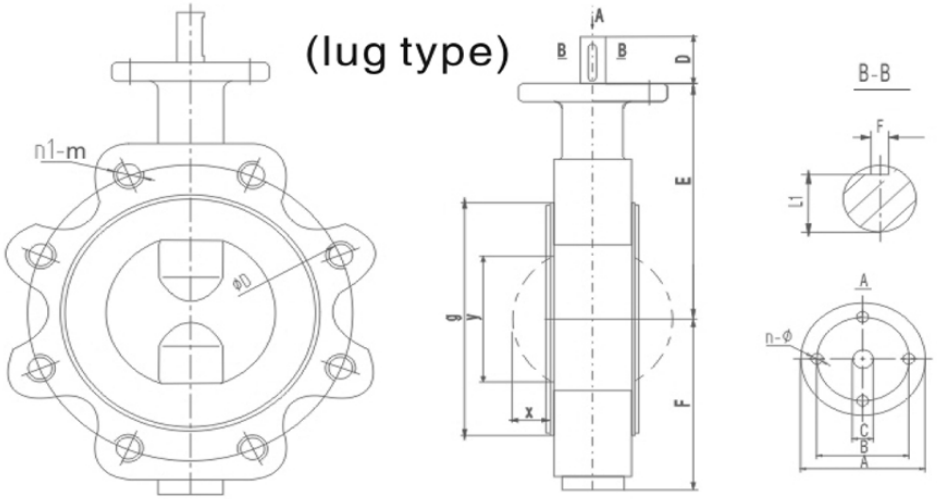

NPS	A	B	C	D	E	F	G	H	N–ø	L	G	X	Y	Weight
2″	77	57	12.6	27	115	60	10.9	3	4–ø10	52	100	9	42	2.9
2–1/2″	77	57	12.6	27	115	60	10.9	3	4–ø10	52	100	9	42	2.9
3″	92	70	12.6	32	150	86	10.9	3	4–ø10	46	135	18	66	5.5
4″	92	70	15.9	32	160	115	12.9	5	4–ø10	52	158	25	85	8.3
5″	92	70	15.9	32	175	130	12.9	5	4–ø14	56	185	35	112	10.3
6″	115	89	22.2	45	192	145	19.2	5	4–ø14	56	210	48	139	13.5
8″	115	89	22.2	45	220	175	19.2	5	4–ø14	60	263	69	187	22.1
10″	140	108	31.8	50	275	215	28	8	4–ø14	68	320	90	237	32.5
12″	140	108	31.8	50	310	250	28	8	4–ø14	78	368	112	290	44.9

NPS		ØD	N1–m		ØD	N1–m
2″	10K	120	4–16	150lb	120.7	4–5/8
2–1/2″		140	4–16		139.7	4–5/8
3″		150	8–16		152.4	4–5/8
4″		175	8–16		190.5	8–5/8
5″		210	8–20		215.9	8–3/4
6″		240	8–20		241.3	8–3/4
8″		290	12–20		298.5	8–3/4
10″		355	12–22		362	12–7/8
12″		400	16–22		431.8	12–7/8

DIMENIONS AND WEIGHT
NPS 14"–24"

(wafer type)

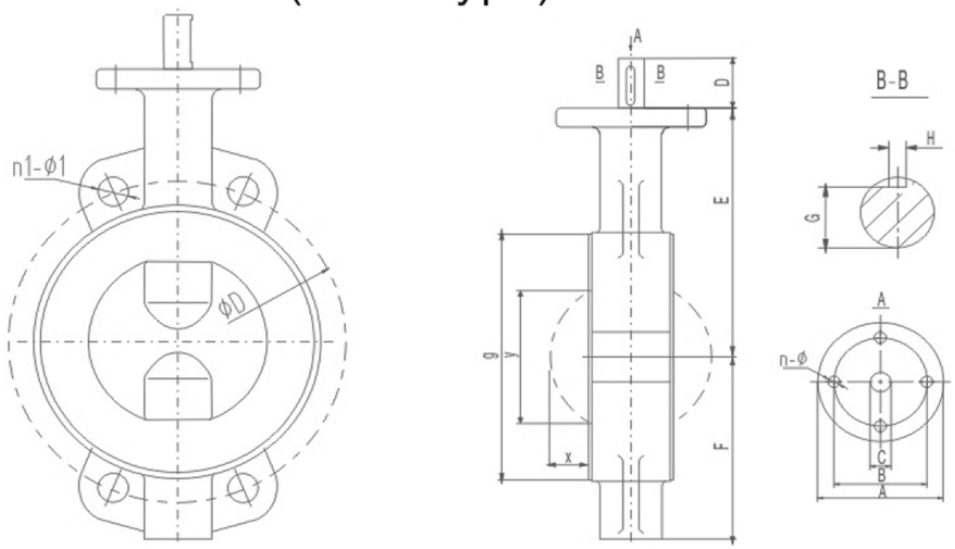

NPS	A	B	C	D	E	F	G	H	N–Ø	L	K	X	Y	Weight
14″	210	165	38	55	360	285	33	10	4–Ø22	78	410	136	341	75
16″	210	165	38	55	395	320	33	10	4–Ø22	102	460	147	383	110
18″	210	165	44	65	435	360	38.5	14	4–Ø22	114	518	167	432	130
20″	210	165	44	65	455	385	38.5	14	4–Ø22	127	565	181	473	190
24″	210	165	55	75	525	445	49	16	4–Ø22	154	658	218	569	280

NPS		ØD	N1–Ø1		ØD	N1–Ø1
14″	10K	445	16–25	150lb	476.3	20–1 3/8
16″		510	16–27		539.8	20–1 1/4
18″		565	20–27		577.9	16–1 1/4
20″		620	20–27		635	16–1 1/8
24″		730	24–33		749.3	12–1 1/8

(lug type)

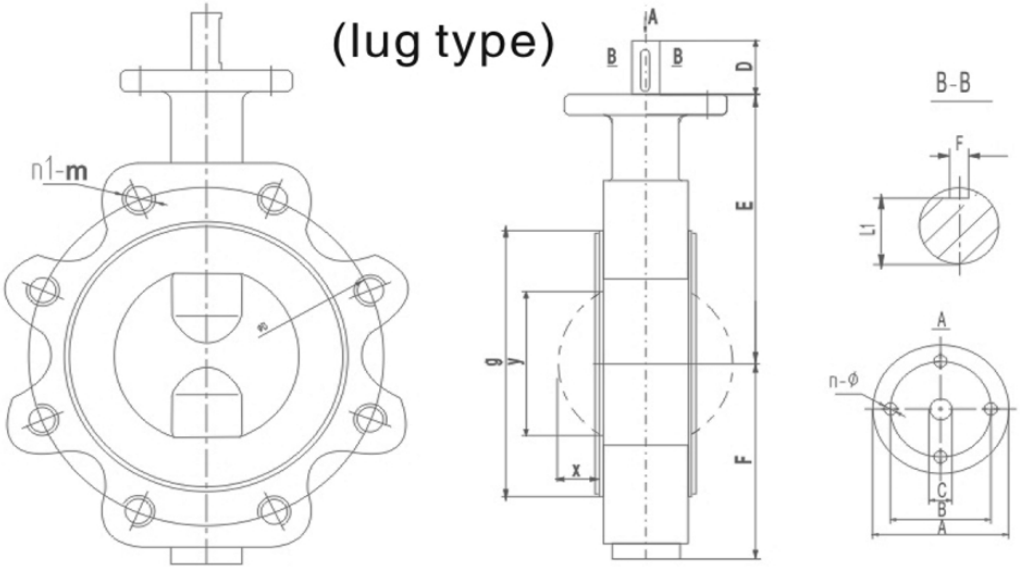

NPS	A	B	C	D	E	F	G	H	N–Ø	L	K	X	Y	Weight
14″	210	165	38	55	360	285	33	10	4–Ø22	78	410	136	341	97
16″	210	165	38	55	395	320	33	10	4–Ø22	102	460	147	383	143
18″	210	165	44	65	435	360	38.5	14	4–Ø22	114	518	167	432	169
20″	210	165	44	65	455	385	38.5	14	4–Ø22	127	565	181	473	247
24″	210	165	55	75	525	445	49	16	4–Ø22	154	658	218	569	365

NPS		ØD	N1–Ø1		ØD	N1–Ø1
14″	10K	445	16–22	150lb	476.3	12–1
16″		510	16–24		539.8	16–1
18″		565	20–24		577.9	16–1 1/8
20″		620	20–24		635	20–1 1/8
24″		730	24–30		749.3	20–1 1/4

DIMENIONS AND WEIGHT
NPS 28"–36"

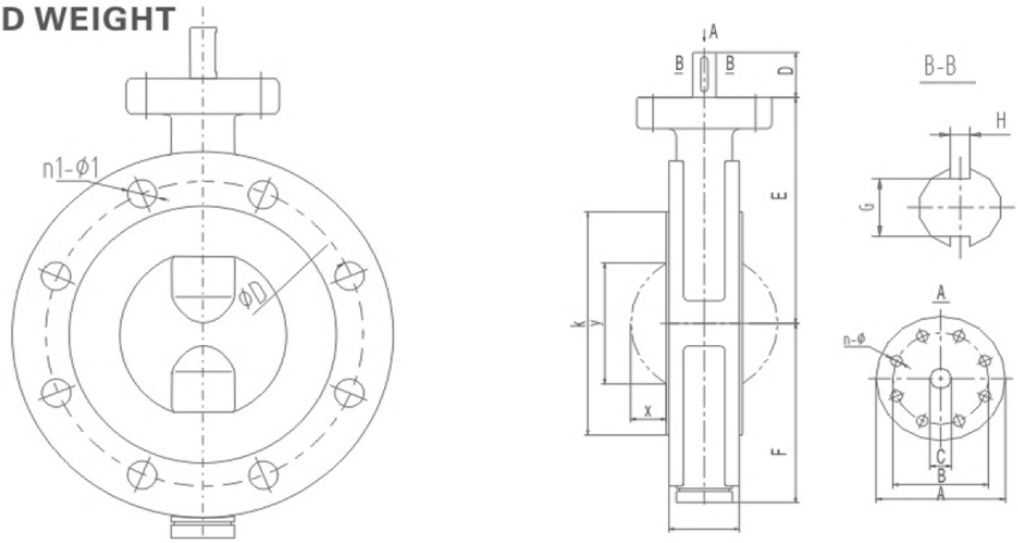

NPS	A	B	C	D	E	F	G	H	N–Ø	L	K	X	Y	Weight
28″	300	254	70	120	670	550	55	20	8–19	165	780	268	680	75
32″	300	254	70	120	750	600	55	20	8–19	190	885	295	756	110
36″	300	254	85	120	790	630	67	22	8–19	203	990	167	432	130

NPS		ØD	N1–Ø1		ØD	N1–m
28″	10K	840	24–33	150lb	795.3	40–7/8
32″		950	28–33		900.1	48–7/8
36″		1050	28–33		1009.6	44–1

Use Boundary in Vacuum

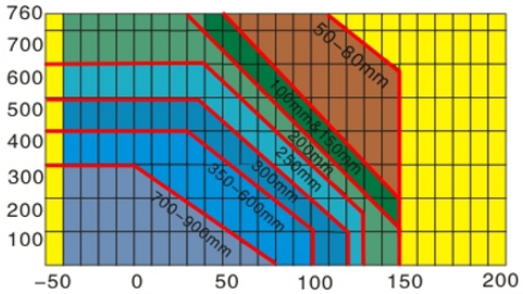

Flow Characteristic Curve

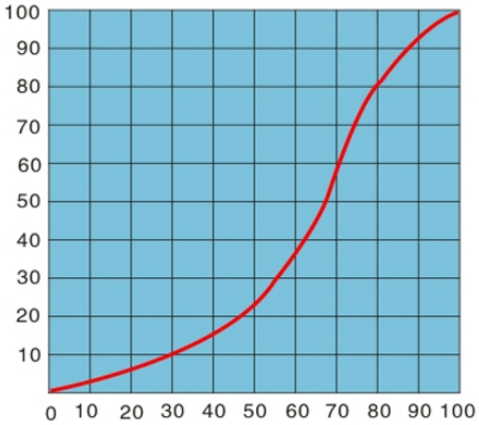

Cv Flow Coefficients

(mm)	CV
50	210
65	210
80	410
100	710
125	1150
150	1750
200	3550
250	5100
300	8870
350	9200
400	14500
450	20100
500	22000
600	31000
700	39500
800	51750
900	63600
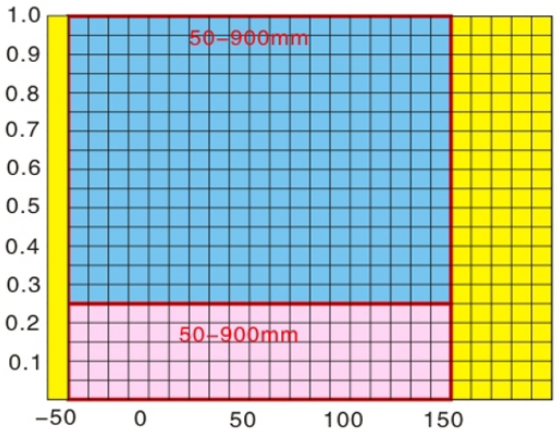
Pressure Temperature Chart