WWW.VALTORC.COM
AJBENTAL@VALTORC.COM
1 (866) VALTORC

SMART VALVE POSITIONER

SERIES SVP-2000-R/L

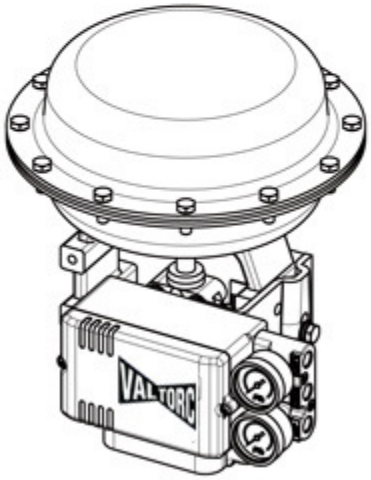

(Linear Type)

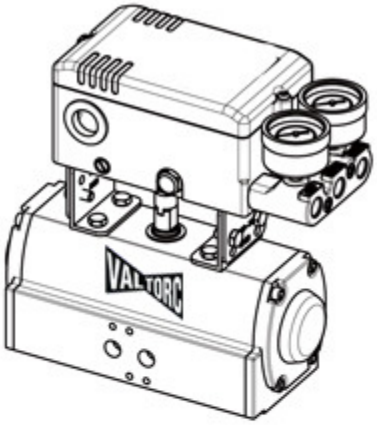

(Rotary Type)

Features

- Easy and quick auto-calibration
- Detecting RA (reverse acting) or DA (direct acting) automatically regardless of wrong air connections
- Available to use for single or double acting without any special adjustments
- Compact design allowing to be installed on small actuators
- Providing error messages against performance failures
- Possible to test the actuator with any fixed signal under a test mode
- Programmable characteristic curve with 17 points
- Wide operating temperature range -30 ~ +80℃
- Improved control of high-friction globe and ball valves by eliminating hunting
- Low air consumption
- Providing a mounting bracket to meet IEC 60534-6-1 for linear valves
- Supporting a NAMUR mounting pattern VDI/VDE 3845 (IEC 60534-6-2) and providing a multi-size mounting bracket for rotary valves

Options

- Output position transmitter (4 - 20 mA)
- 2 x alarm limit or micro switch (SPDT)
- Explosion proof type (IECEx / ATEX / KC Ex ia IIC T6)
- HART communication
- Profibus communication

Specifications

Input Signal	4 - 20 mA @ 24 VDC
Min. / Max. Current	3.6 mA / 50 mA
Voltage Drop (Resistance)	Without Hart : 8.7 VDC (435Ω @ 20 mA) With Hart : 9.4 VDC (470Ω @ 20 mA)
Stroke / Angle	Linear type : 5 - 130 mm * Rotary type : 25 - 120°
Air Supply Pressure	1.4 - 7.0 bar (20 - 100 psi), filtered, compressed dry and non-oiled to meet Class 3 of ISO 8573-1
Output Pressure Range	0 - 100% of supply air pressure
Air Capacity	80 ℓ/min = 4.8 N㎥/h = 2.8 scfm (Sup = 1.4 bar) 233 ℓ/min = 14 N㎥/h = 8.2 scfm (Sup = 6 bar)
Air Consumption	2 ℓ/min = 0.12 N㎥/h = 0.07 scfm (Sup = 1.4 ~ 6 bar)
Characteristic	Linearity < ±0.3% F.S Sensitivity < 0.2% F.S Hysteresis < 0.2% F.S Repeatability < 0.2% F.S
Performance Characteristic	Linear, EQ %, Quick open, User set (17 points)
LCD Indication	4-digit LCD indicator
Adjustable Speed	1 - 1000 (lowest 1, highest 1000)
Scan Time	2ms
Shut-off Value	Range 0 - 10% of position signal
Valve Action	Direct action(DA) / reverse action(RA)
Operating Temperature	- 30 ~ +80℃ (- 22 ~ +176 ℉) **
Pneumatic Connections	Rc 1/4 or 1/4 NPT
Electrical Connections	2 x G 1/2 or 1/2 NPT
Protection Class	IP66, intrinsic safety (IECEx / ATEX / KC Exia IIC T6)
Body Material	Aluminum die-cast / powder-painted
Weight	1.6 kg

* Up to 200mm on request ** -40℃ on request

Principle of Operation

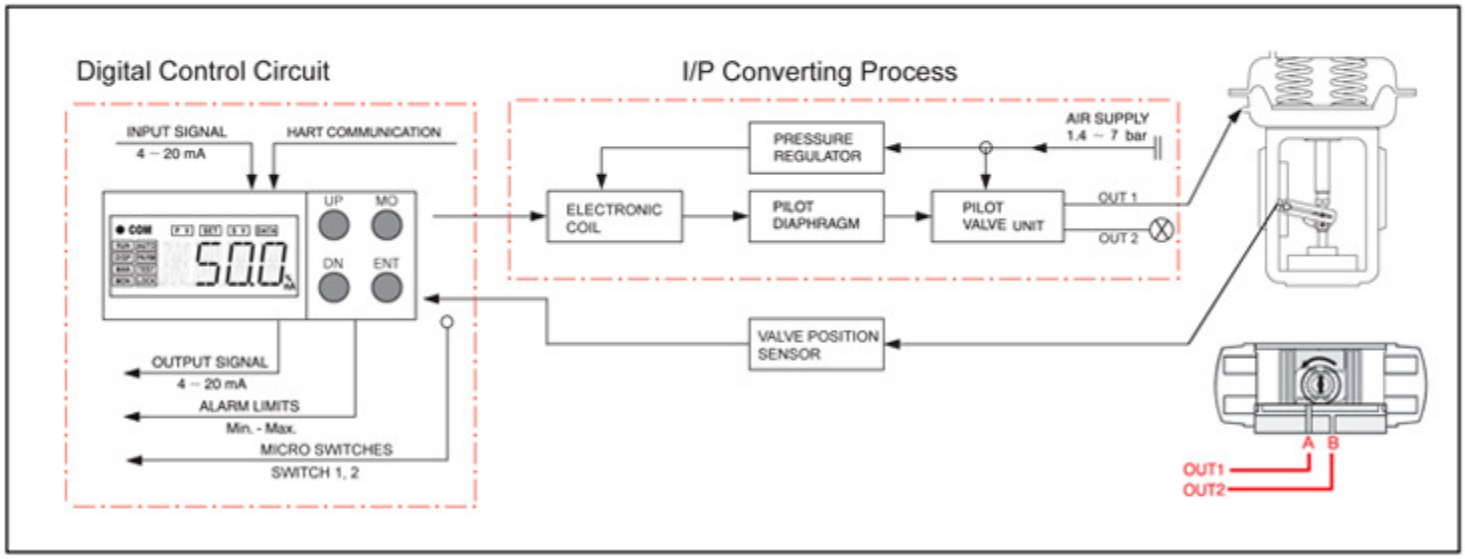

If 4-20 mA input signal is supplied, the micro processor compares input signal with position feedback and sends control signal to the I/P converting module. Pneumatic signal from the I/P converting module operates the valve and the valve stays at the desired position.

Mounting to Linear Actuator

(Linear Type)

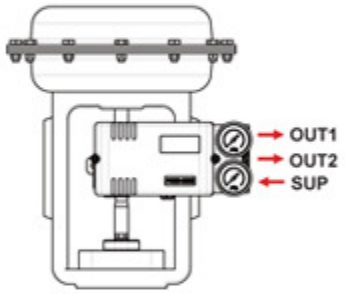

< Front View >

< Side View >

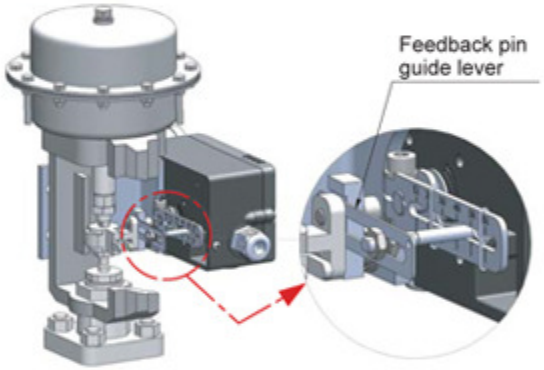

< Feedback Lever Connection >

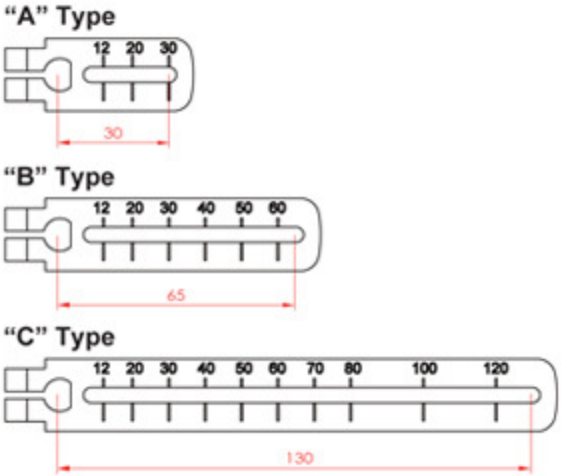

Feedback Lever

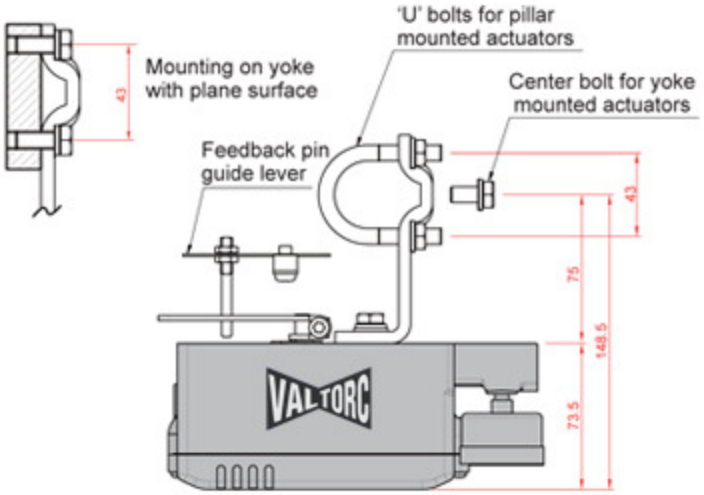

Mounting to linear actuators

Mounting to Rotary Actuator

(Rotary Type)

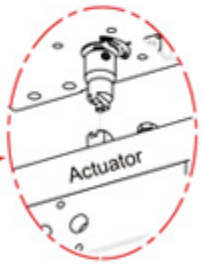

NAMUR Type Mounting

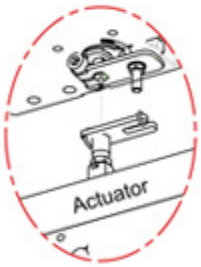

Fork Lever Type Mounting

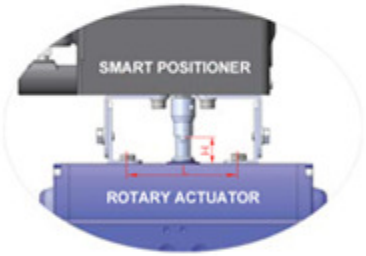

Size Variation of Multi-Size Bracket

1) 80 x 30 x 20 (H) , 4) 130 x 30 x 20 (H)
2) 80 x 30 x 30 (H) , 5) 130 x 30 x 30 (H)
3) 80 x 30 x 50 (H) , 6) 130 x 30 x 50 (H)

H : Rotary Actuator Shaft Height
L : Length (80 or 130mm)

Air Connections

(Linear Type)

Direct Acting (DA)	
DA 1 As the input signal increases, Valve stem moves downwards Actuator : DA	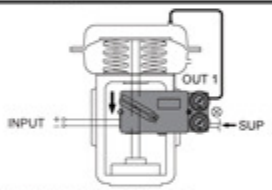 OUT2 must be plugged
DA 2 As the input signal increases, Valve stem moves downwards Actuator : DA	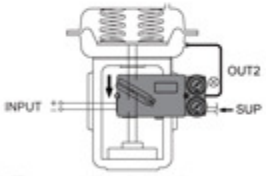 OUT1 must be plugged
DA 3 As the input signal increases, Valve stem moves downwards	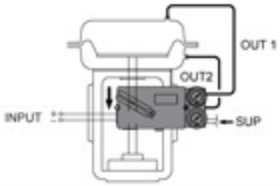

Reverse Acting (RA)	
RA 1 As the input signal increases, Valve stem moves upwards Actuator : RA	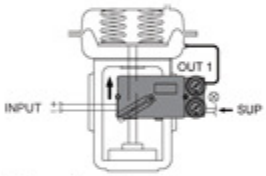 OUT2 must be plugged
RA 2 As the input signal increases, Valve stem moves upwards Actuator : RA	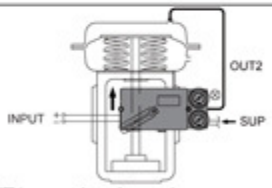 OUT1 must be plugged
RA 3 As the input signal increases, Valve stem moves upwards	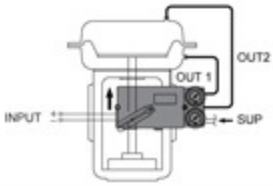

(Rotary Type)

Spring Return	Double Acting	Double Acting
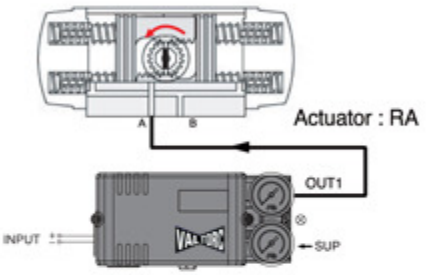 OUT2 must be plugged	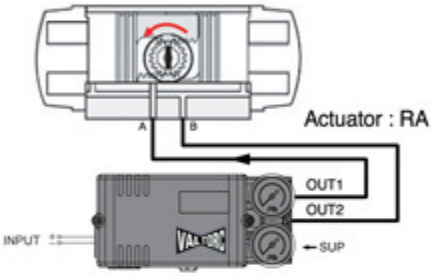	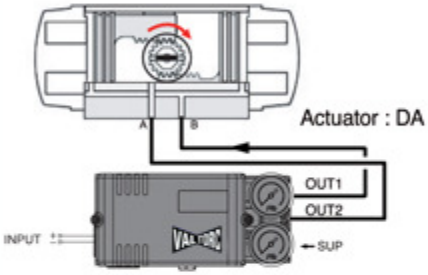
As the input signal increases, Actuator shaft rotates counter-clockwise	As the input signal increases, Actuator shaft rotates counter-clockwise	As the input signal increases, Actuator shaft rotates clockwise

	Spring Return	Double Acting
Reverse Acting	Out1 : piped, Out2 : plugged	Out1 : piped to Actuator port A, Out2 : piped to Actuator port B
Direct Acting	Out1 : plugged, Out2 : piped	Out1 : piped to Actuator port B, Out2 : piped to Actuator port A

WWW.VALTORC.COM
AJBENTAL@VALTORC.COM
1 (866) VALTORC

Front Cover Removed

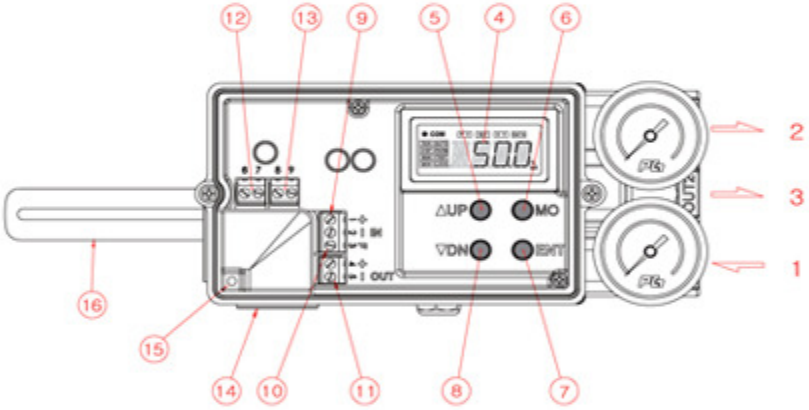

1 : Air supply
2 : OUT 1
3 : OUT 2
4 : Display LCD
5 : Up key
6 : Mode key
7 : Enter key
8 : Down key
9 : Input signal (+, -)
10 : Frame ground
11 : Output signal (+, -)
12 : Alarm limit 1
13 : Alarm limit 2
14 : Electrical connections
15 : Ground
16 : Feedback lever

Electrical Connections

1 (+) / 2 (−) → IN. 4-20mA input signal
3 (FG) → Frame Ground
4 (+) / 5 (−) → OUT. 4-20mA output signal
6 (+) / 7 (−) → LS1. (Low) Alarm limit 1
8 (+) / 9 (−) → LS2.(High) Alarm limit 2

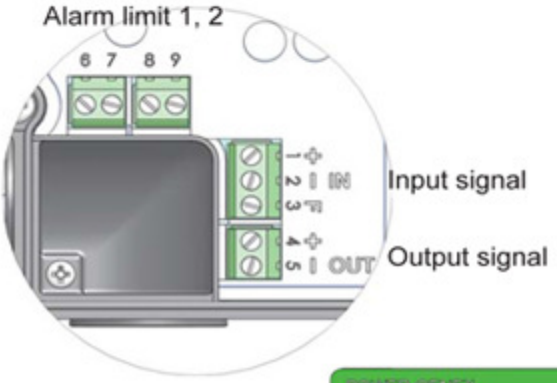

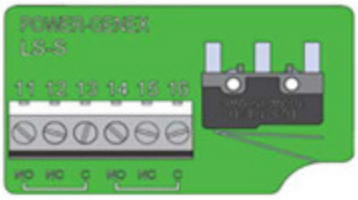

Micro switches 1, 2

Characteristic Curves

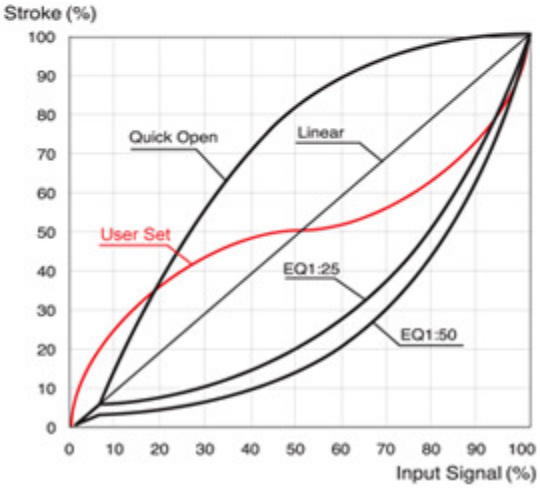

Quick Start and Checking

	Button	Action
Auto - Calibration	MO	Push 5 seconds for auto-calibration
Span	▽DN → ENT ▽DN or ΔUP ENT → MO	Push ▽DN 5 seconds to change a measured span (Try this option only when a valve doesn't reach a desired position)
Ambient Temp.	ENT	Confirm an ambient temperature surrounding this smart valve positioner

Parameters Diagram

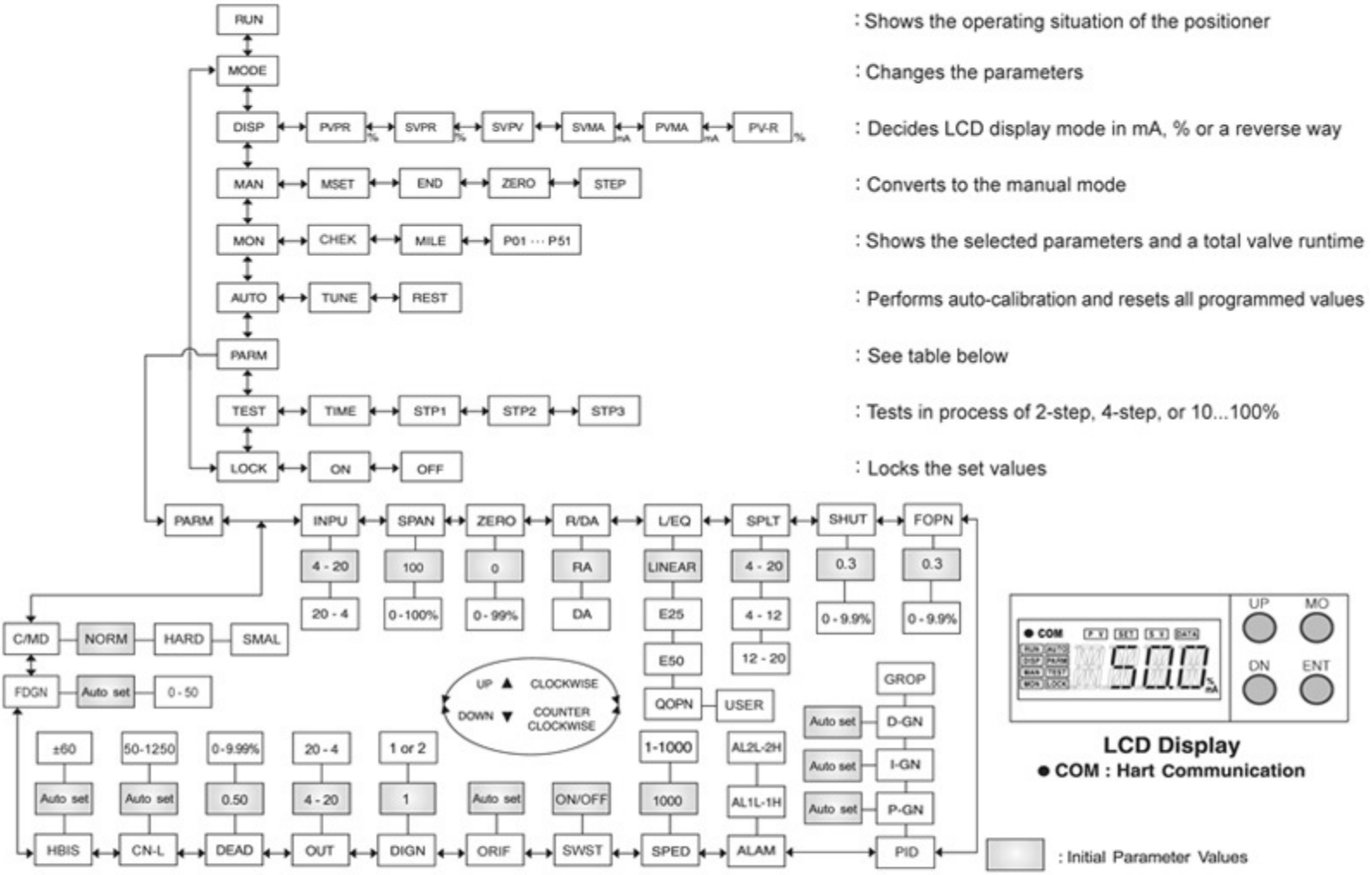

Parameters	Descriptions	Functions	Initial value
INPU	Input signal	4 - 20mA or 20 - 4mA	4 - 20 mA
SPAN	Span range	0 - 100% span adjustment	0%
ZERO	Zero-up	Position Zero up and down 0 - 99%	0%
R / DA	RA / DA	Reverse or direct acting	RA
L / E.Q / QOPN / USER	Linear / E.Q% / Quick open / User set	Linear, E.Q%(1:25 or 1:50), Quick open, User set(17 points)	Linear
SPLT	Split range	4 - 12mA or 12 - 20mA	4 -20 mA
SHUT	Shut-off	Valve shut off at 0 - 9.9%	0.3%
FOPN	Full-open	Valve full open at 0 - 9.9%	0.3%
PID	P-Gain / I-Gain / D-Gain / Grop	Gain value	Auto setting
ALAM	Alarm limit low, high	AL1L / AL1H, AL2L / AL2H	Low (0 - 10%), High (90 - 100%)
SPED	Speed control	1 -1000	1000
SWST	Slow start	Valve slow start ON-OFF	Auto setting
ORIF	Orifice	Orifice value	Auto setting
DIGN	Display digit	Move to one or two decimal places	1
OUT	Output signal	4 - 20mA or 20 - 4mA	4 - 20 mA
DEAD	Dead zone	0 - 9.99%	0.5%
CN-L	Control limit	Control limit value at 50 - 1250	Auto setting
HBIS	HARD mode BIOS	Oscillation control value at -50 --- +50	Auto setting
FDGN	HARD mode fast D-Gain	HARD mode fast D-Gain	Auto setting
C/MD	NORM / HARD / SMAL	Standard operation, with hard friction for small valve	NORM

Wiring Alarm Limits

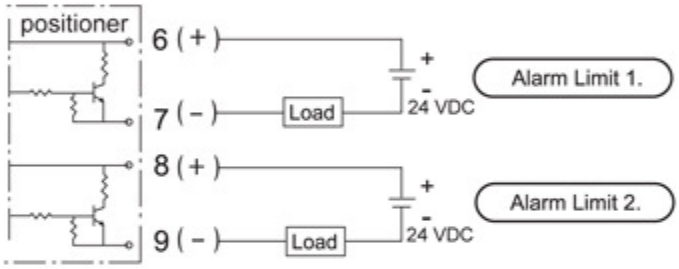

Note that 24 VDC should be supplied for power.

Measuring Output Signal

① With mA loop calibrator

② With mulitimeter (mA)

ZERO and SPAN of position feedback are automatically set after auto-calibration process.

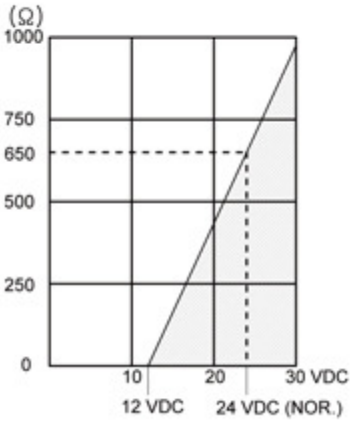

Transmitter Load Limitation

Micro Switches

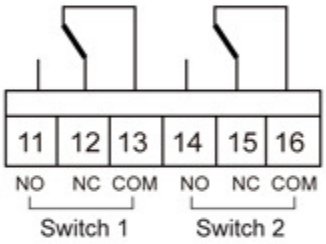

Micro Switches	
Type	SPDT
Rating	10.1A @ 250 VAC
Ambient Temperature	-25 ~ +85℃
Position Transmitter	
Output Signal	4 - 20 mA, 2-wire
Power Supply	12 - 30 VDC
Output Current Limit	30 mA DC
Linearity	±0.5% F.S
Operating Temperature	-20 ~ +80℃

WWW.VALTORC.COM
AJBENTAL@VALTORC.COM
1 (866) VALTORC

Dimensions

(Linear Type)

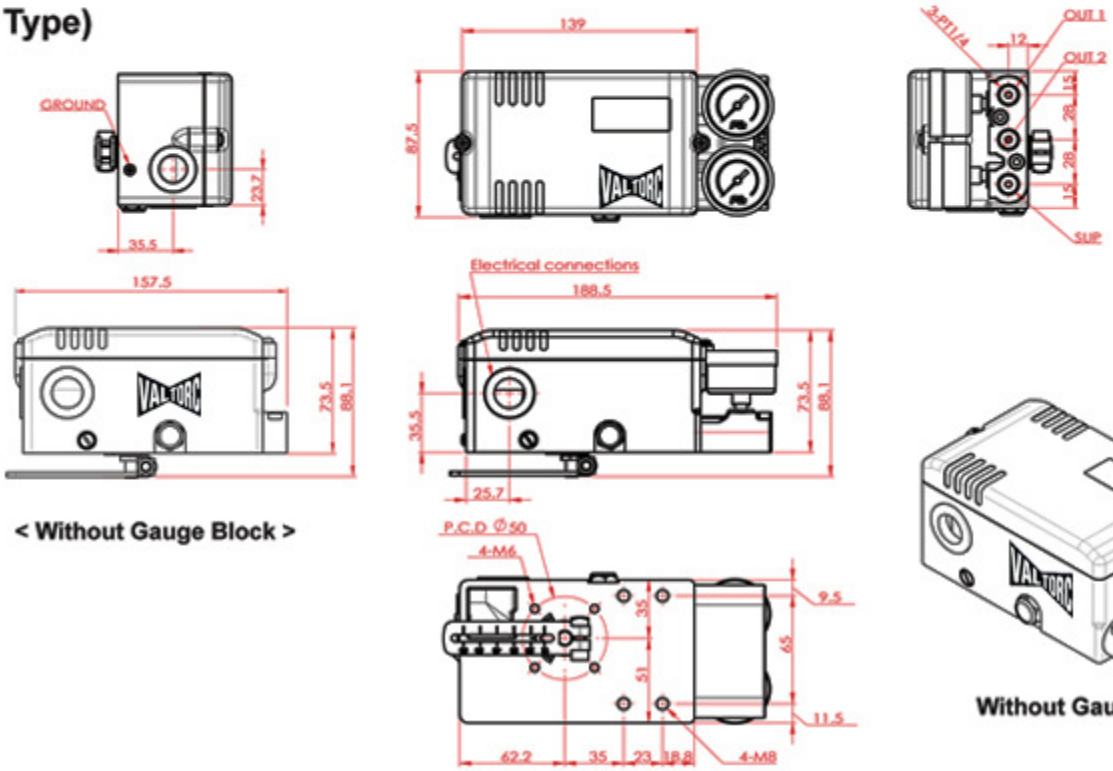

< Without Gauge Block >

Without Gauge Block

(Rotary Type)

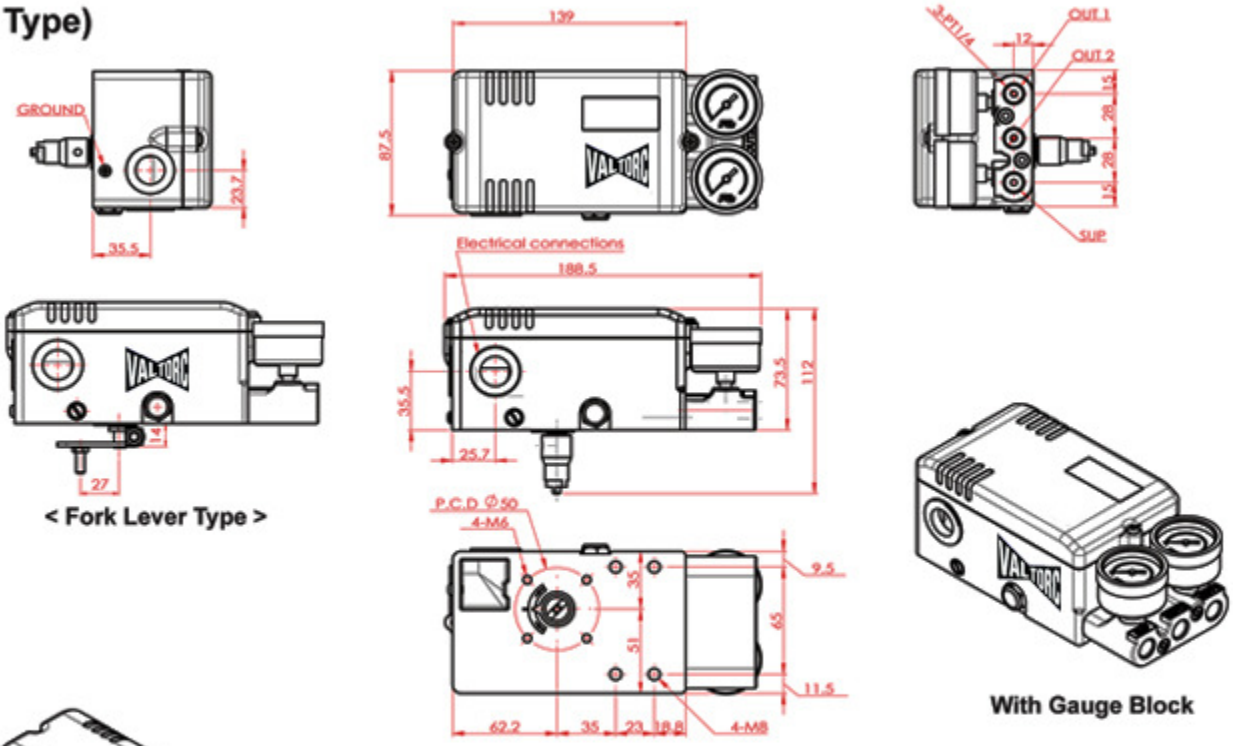

< Fork Lever Type >

With Gauge Block

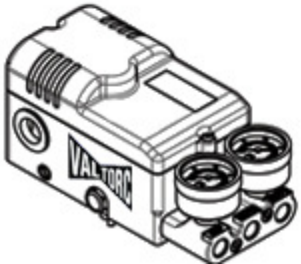

WWW.VALTORC.COM
AJBENTAL@VALTORC.COM
1 (866) VALTORC

Dimensions

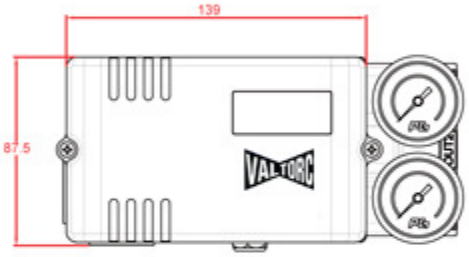

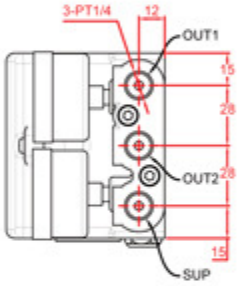

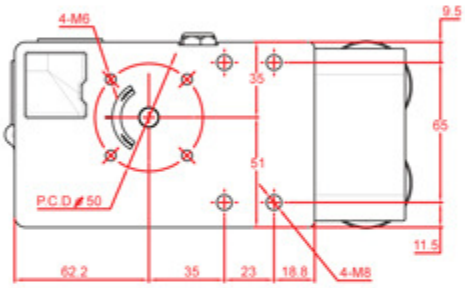

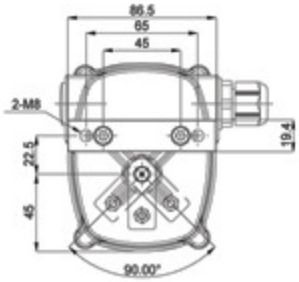

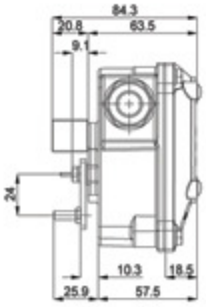

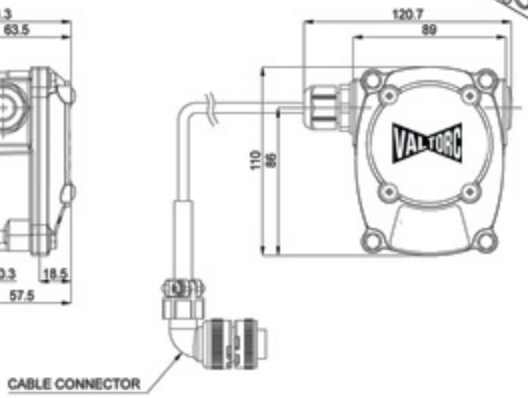

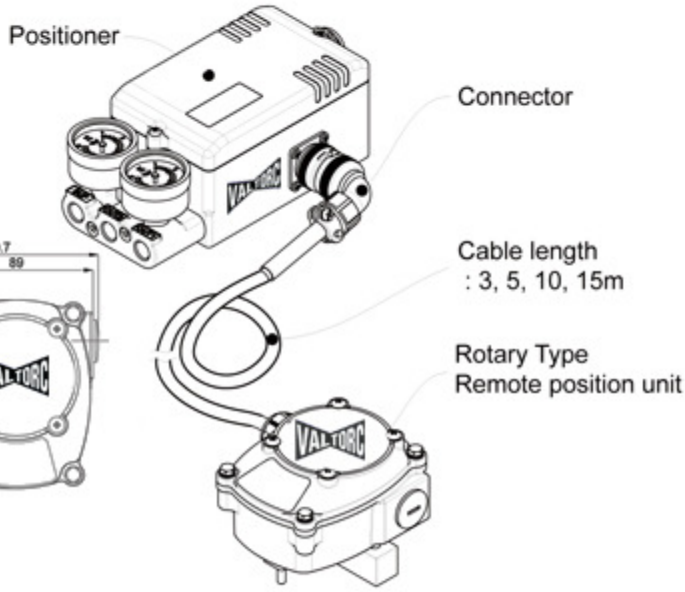

Dimensions

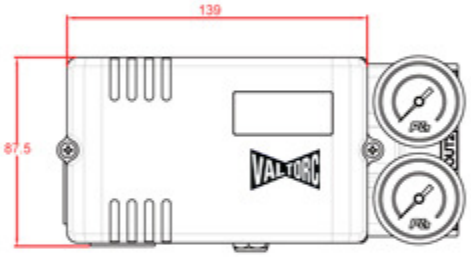
139
87.5

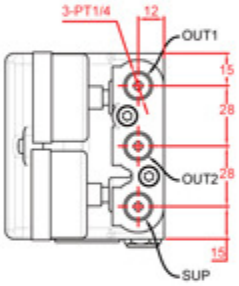
3-PT1/4
12
OUT1
15
28
OUT2
28
15
SUP

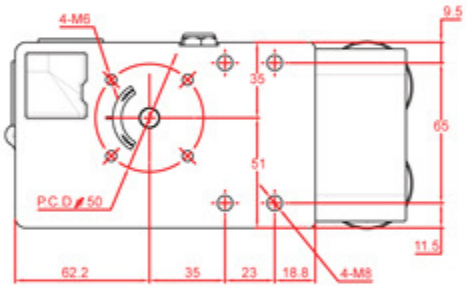
4-M6
9.5
35
65
51
P.C.D ø50
11.5
62.2
35
23
18.8
4-M8

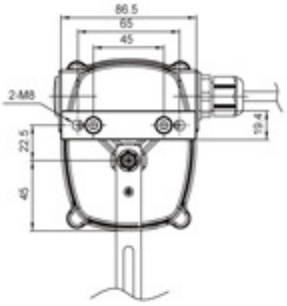
86.5
65
45
2-M8
19.4
22.5
45

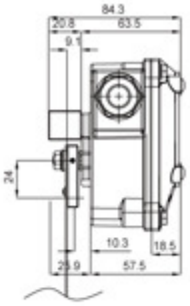
84.3
20.8
63.5
9.1
24
10.3
18.5
29.9
57.5

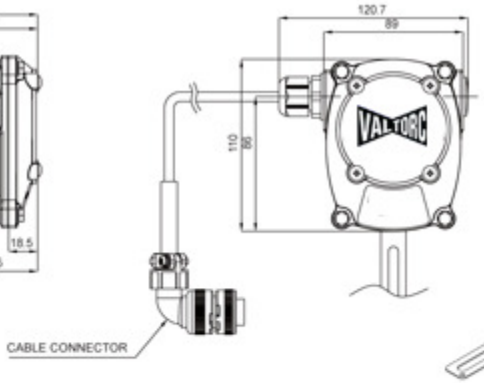
120.7
89
110
86
CABLE CONNECTOR

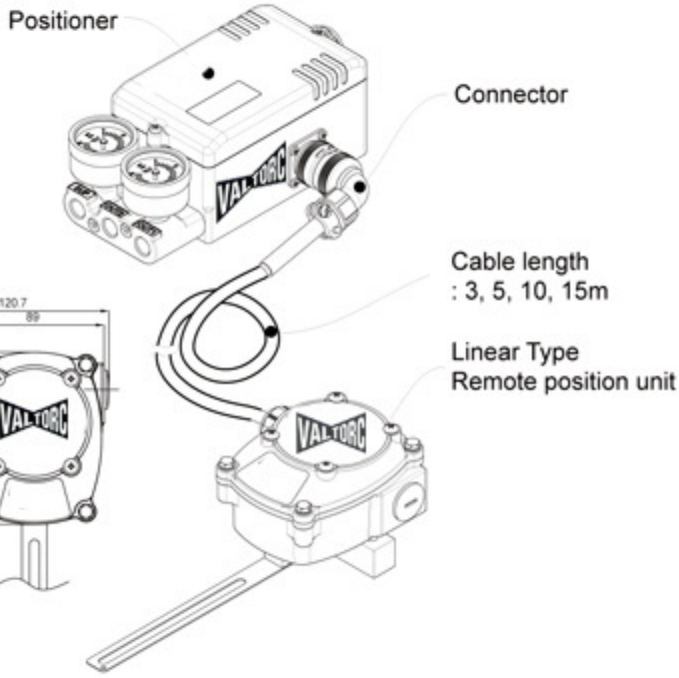
Positioner
Connector
Cable length
: 3, 5, 10, 15m
Linear Type
Remote position unit