WWW.VALTORC.COM
AJBENTAL@VALTORC.COM
1 (866) VALTORC

MULTI-PORT SERIES (FLANGED)

SERIES 280

SIZES: 5" - 12"

FEATURES/SPECIFICATIONS:

- -Available in 316 stainless steel
- -Full port design
- -ISO 5211 mounting pad (sizes 1/2"-4" are direct mounting)
- -Investment cast and sand cast body construction
- -Meets International Standards
- -150# ANSI Flanged ends
- -L or T Port
- -Size: 5"-12"

CLASS150 & PN16

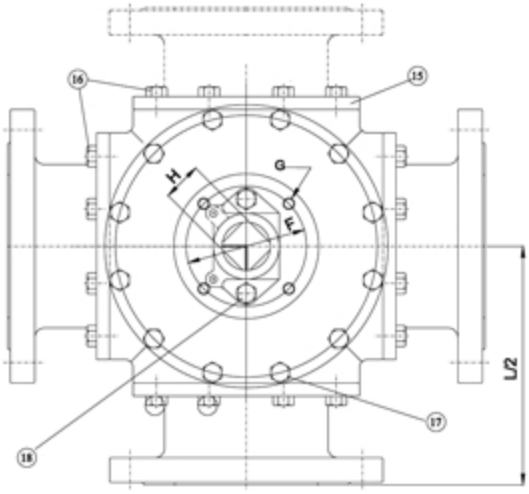

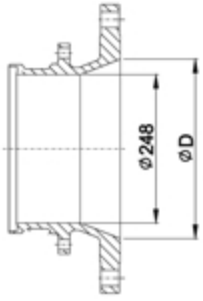

12"
STD. PORT

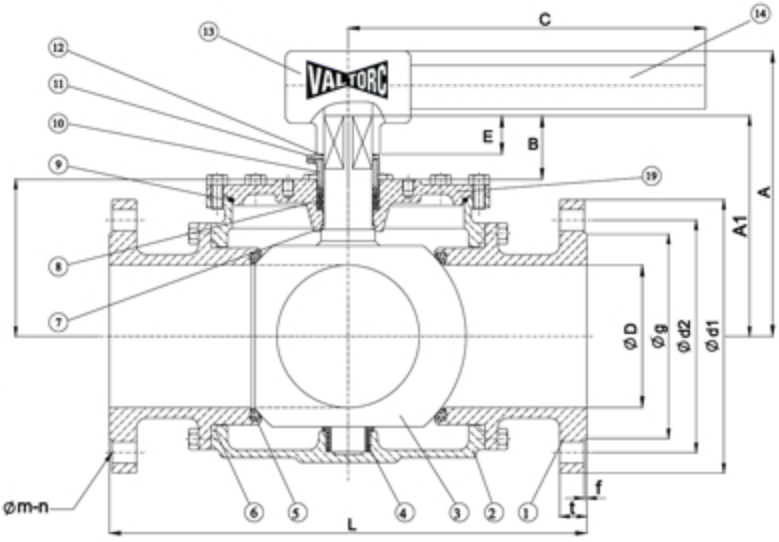

DIMENSIONS (mm)/ASME150 & PN16 (5" to 10", 12" std. Bore)

SIZE	A	A1	B	C	D	D1	E	F	G	H	K	L
5"	255	198.5	59	860	125	-	36	125	M12	28	140.5	418
6"	294	222	62	1200	150	-	36	125	M12	36	159.5	427
8"	335	263	62	1500	200	-	36	125	M12	36	201	532
10" & 12" (std)	408	345	93	2000	248	300	59	140	M16	36	252	660

DIMENSIONS (mm)/ ASME150 & PN16 (5" to 8")

SIZE	ASME150							PN16						
	d1	d2	g	m	n	t	f	d1	d2	g	m	n	t	f
5"	254.0	215.9	186.0	22.0	8	23.9	1.6	250	210	188	18	8	22	3
6"	279.3	241.5	216.0	22.0	8	25.4	1.6	285	240	212	22	8	22	3
8"	343.0	298.45	270.0	22.0	8	28.6	1.6	340	295	268	22	12	24	3
10"	406.5	362.0	324.0	25.4	12	30.2	1.6	405	355	320	26	12	26	3
12" (std. Bore)	483.0	432.0	381.0	26.0	12	32.5	1.6	460	410	378	26	12	28	4