VALTORC

WWW.VALTORC.COM
AJBENTAL@VALTORC.COM
1 (866) VALTORC

RESILIENT SEATED BUTTERFLY VALVES

SIZES 2"-24"

LUG & WAFER

VALTORC is pleased to offer top-of-the-line products in pipeline flow control. The VALTORC Butterfly Valve (wafer body) and previous series (lug body) Butterfly Valves have been developed with extensive application, design and manufacturing expertise. These products are produced by employing modern manufacturing practices under a robust quality assurance system. These practices ensure consistent product quality and dependable performance. VALTORC Butterfly Valves have been designed to include state-of-the-art features that are described in this bulletin.

Features

- Stem connection available in standard VALTORC sizes or optional sizes to match standard secondary top plate drilling.
- Top plate double drilled to fit ISO 5211 dimensions and standard secondary bolt circle dimensions. All handles, gear operators and pneumatic VALTORC actuators are designed to mount directly to VALTORC Valves.
- Nylon PA 12 coated disc option ensures excellent corrosion resistance to several chemical media. The hard, non-porous sintered polymer has very low hygroscopicity and is suitable for use in drinking water and non-alcoholic foodstuffs.
- One piece stem with close tolerance double D drive eliminates the need for disc screws or taper pins.
- Double O-rings are molded in both upper and lower journals providing a superior secondary seal.
- Unique "Center-Lock" seat design virtually eliminates any seat movement during the seating and un-seating of the disc.
- Heavy duty square-grooved seat design with molded O-ring seals to serve as flange gaskets. EPDM seats are peroxide cured to yield the best elastic properties of the elastomer.

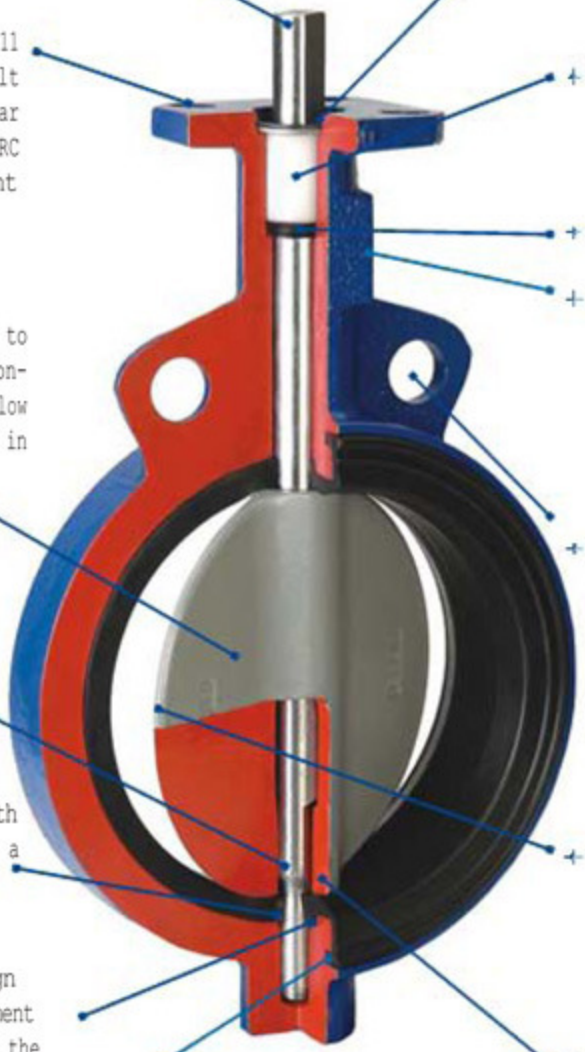

- Unique stem retention system to provide blow-out proof stem and easy assembly and disassembly of valve.
- Heavy duty acetal bushing absorbs the forces acting on the stem/disc assembly due to line pressure.
- Bi-directional 'U' cup stem seal.
- Heavy duty one-piece body with extended neck for 2" piping insulation. Standard coating is two coats of hard, Zinc-rich epoxy for excellent corrosion resistance.
- Two flange locating holes for sizes up to 12" and four flange locating holes from size 14" to 24" for easy alignment of valve during installation. They meet ANSI #125 /150 or other world drilling standards.
- High strength disc with hand polished disc edge and hubs.
- Precision machined radius on the upper and lower disc hubs is pressed against upper and lower seat sealing faces for achieving primary sealing between disc and seat.

"Center-Lock" seat design

MATERIAL TABLE(ASTM)			
BODY	DISC	SEAT	STEM
A126-B	A395	NBR	A182-F6A
A395	A351-CF8	EPDM	A182-F304
	A351-CF8M	CR	A182-F316
	B148-954	VITON	

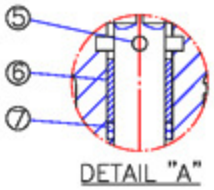

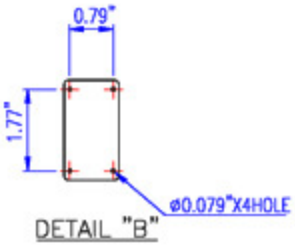

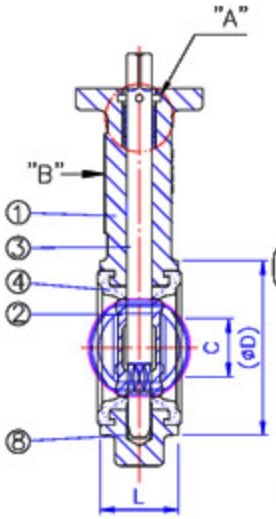

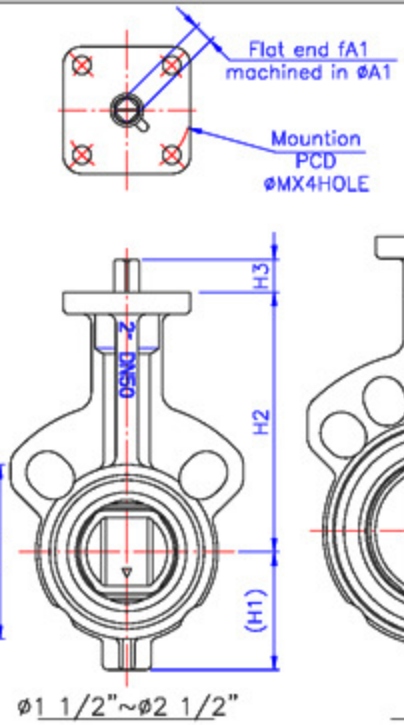

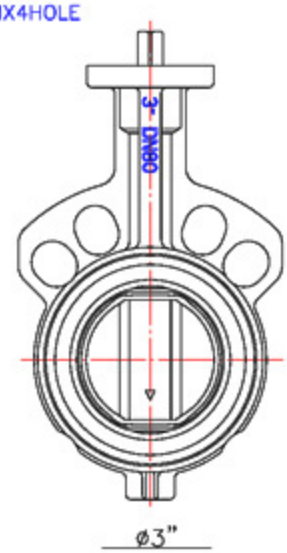

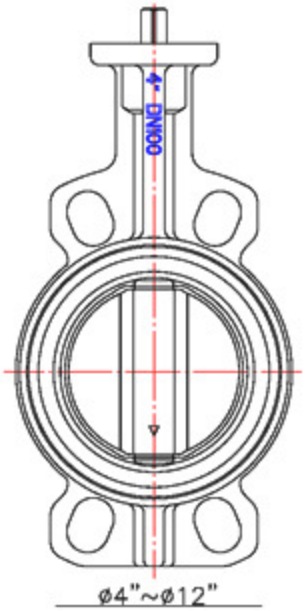

NOM. SIZE	L	øD	H1	H2	øA1	C	fA1	H3	Mountion	PCD	øM
1 1/2"	1.30"	3.19"	2.36"	4.72	0.55"	1.34"	0.43"	0.75"	F07	2.76"	0.39"
2"	1.69"	3.78"	2.56"	5.63"	0.55"	1.54"					
2 1/2"	1.81"	4.33"	2.80"	6.10"	0.55"	2.17"					
3"	1.81"	4.88"	3.03"	6.38"	0.55"	2.72"					
4"	2.05"	5.83"	4.21"	7.13"	0.55"	3.58"					
5"	2.20"	7.09"	4.80"	7.76"	0.71"	4.53"	0.55"				
6"	2.20"	8.11"	5.51"	8.27"	0.71"	5.51"					
8"	2.36"	10.20"	6.50"	9.45"	0.87"	7.32"	0.67"	0.94"	F10	4.02"	0.47"
10"	2.68"	12.60"	7.91"	11.26"	0.98"	9.41"	0.75"				
12"	3.07"	14.57"	9.21"	12.17"	1.10"	11.34"	0.87"				

FACE TO FACE DIMENSIONS:
ISO 5752 TABLE 5 SHORT.
FLANGE:ANSI 125/150.
BS TABLE E.
JIS 10K.
DIN PN10.
DIN PN16.
MOUNTING FLANGE:ISO 5211
PRESSURE CLASS :230 PSI

ITEM NO.	PART NAME	Q'TY	MATERIAL
8	BOTTOM BUSHING	1	ASTM B62
7	O-RING	2	NBR
6	UPPER BUSHING	1	DELRIN
5	STOP PIN	1	ASTM A182 F316
4	SEAT	1	SEE MATERIAL TABLE
3	STEM	1	
2	DISC	1	
1	BODY	1	

Size	L	H1	H2	H3	C	øD	fA1	øA1	Mounting	PCDøM	øM1
14"	3.07"	11.93"	12.95"	1.14"	12.80"	16.22"	1.06"	1.38"	F12(S.T)/F14	4.92"(S.T)/5.51"	0.51"(ST)/0.71"
16"	4.02"	13.13"	14.21"	1.14"	14.76"	18.70"	1.06"	1.38"	F12(S.T)/F14	4.92"(S.T)/5.51"	0.51"(ST)/0.71"
18"	4.49"	14.11"	15.47"	1.50"	16.65"	20.87"	1.42"	1.97"	F14(S.T)/F16	5.51"(S.T)/6.50"	0.71"(ST)/0.87"
20"	5.00"	15.45"	16.81"	1.50"	18.62"	23.03"	1.42"	1.97"	F14(S.T)/F16	5.51"(S.T)/6.50"	0.71"(ST)/0.87"
22"	6.06"	16.63"	17.99"	1.50"	20.08"	25.08"	1.42"	1.97"	F14(S.T)/F16	5.51"(S.T)/6.50"	0.71"(ST)/0.87"
24"	6.06"	17.89"	19.37"	1.89"	22.05"	27.05"	1.81"	2.36"	F16	6.50"	0.87"

FACE TO FACE DIMENSIONS:
ISO 5752 TABLE 5 SHORT.
FLANGE:ANSI 125/150.
BS TABLE E.
JIS 10K.
DIN PN10.
DIN PN16.
MOUNTING FLANGE:ISO 5211
PRESSURE CLASS :150 PSI

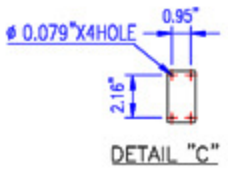

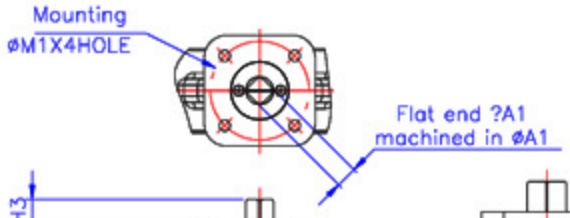

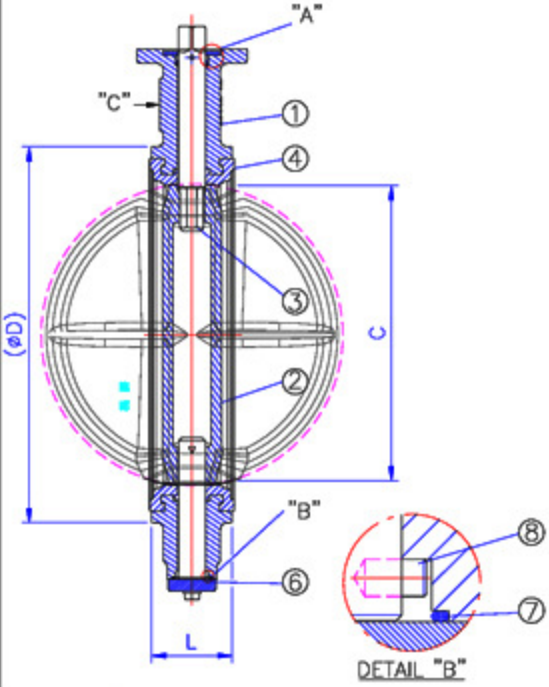

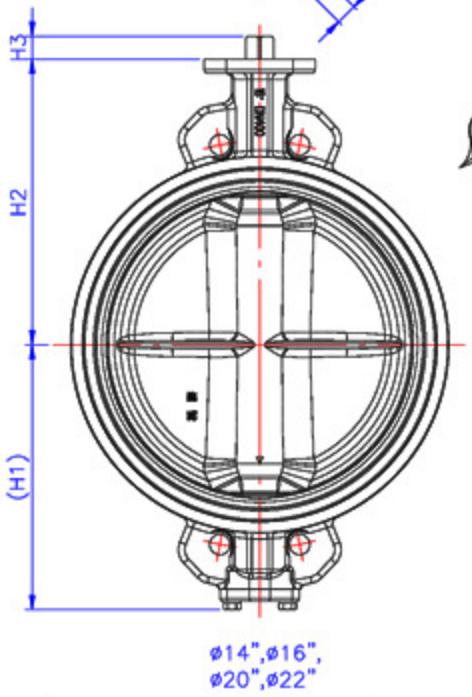

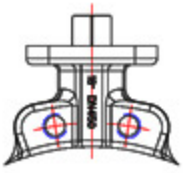

MATERIAL TABLE (ASTM)	
BODY	DISC
A126-B	A395
A395	A351 CF8
	A351 CF8M
	B148-954
SEAT	STEM
NBR	A182 F6A
EPDM	A182 F304
NEOPRENE	A182 F316
SILICON	
HYPALON	
VITON	

ITEM NO.	PART NAME	Q'TY	MATERIAL
9	BUSH	1	ASTM A240 304
8	STOP PIN	3	ASTM A182 F304
7	O-RING	2	NBR
6	BOTTOM	1	ASTM A126-B
5	UP COVER	1	ASTM A126-B
4	SEAT	1	SEE MATERIAL TABLE
3	STEM	2	SEE MATERIAL TABLE
2	DISC	1	SEE MATERIAL TABLE
1	BODY	1	SEE MATERIAL TABLE

BODY	DISC	SEAT	STEM
A126-B A395	A395NYL11 A351-CF8 A351-CF8M B148-954	NBR EPDM EPDMW VITON	A182-F6A A182-F304 A182-F316

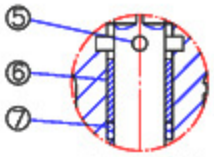

DETAIL "A"

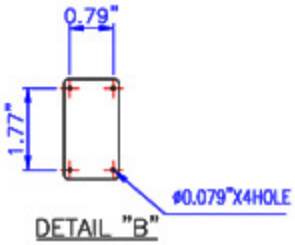

DETAIL "B"

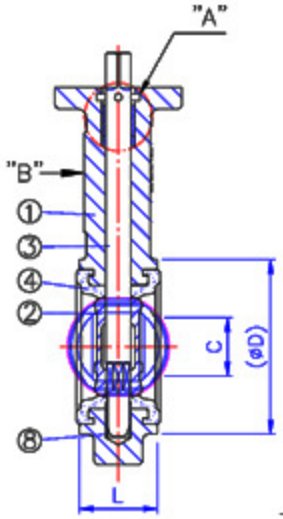

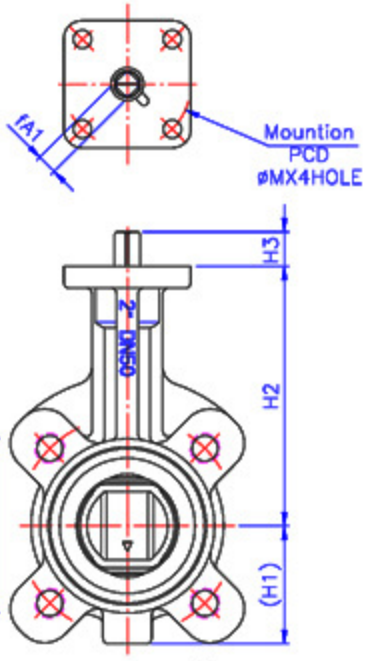

ø1-1/2~ø3"

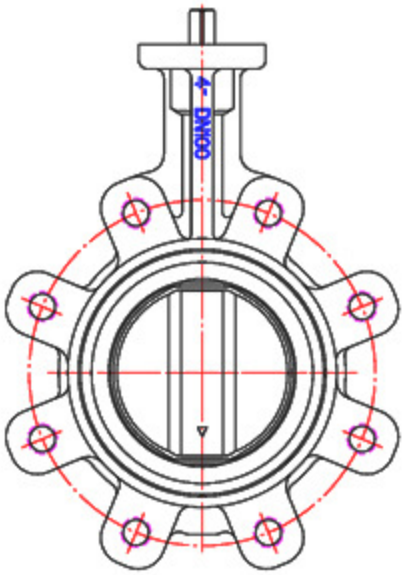

ø4~ø12"

NOM. SIZE	L	øD	H1	H2	øA1	C	fA1	H3	Mountion	PCD	øM
1 1/2"	1.30"	3.19"	2.36"	4.72	0.55"	1.34"	0.43"	0.75"	F07	2.76"	0.39"
2"	1.69"	3.78"	2.56"	5.63"	0.55"	1.54"					
2 1/2"	1.81"	4.33"	2.80"	6.10"	0.55"	2.17"					
3"	1.81"	4.88"	3.03"	6.38"	0.55"	2.72"					
4"	2.05"	5.83"	3.50"	7.13"	0.55"	3.58"					
5"	2.20"	7.09"	4.41"	7.76"	0.71"	4.53"	0.55"				
6"	2.20"	8.11"	4.84"	8.27"	0.71"	5.51"					
8"	2.36"	10.20"	5.91"	9.45"	0.87"	7.32"	0.67"	0.94"	F10	4.02"	0.47"
10"	2.68"	12.60"	7.05"	11.26"	0.98"	9.41"	0.75"				
12"	3.07"	14.57"	8.50"	12.17"	1.18"	11.34"	0.87"				

FACE TO FACE DIMENSIONS:
ISO 5752 TABLE 5 SHORT.
FLANGE:ANSI 125/150.
BS TABLE E.
JIS 10K.
DIN PN10.
DIN PN16.
MOUNTING FLANGE:ISO 5211
PRESSURE CLASS :16BAR.
230 PSIG

ITEM NO.	PART NAME	Q'TY	MATERIAL
8	BOTTOM BUSHING	1	ASTM B62
7	O-RING	2	NBR
6	UPPER BUSHING	1	DELRIN
5	STOP PIN	1	ASTM A182 F316
4	SEAT	1	SEE MATERIAL TABLE
3	STEM	1	
2	DISC	1	
1	BODY	1	

Size	L	H1	H2	H3	C	øD	fA1	øA1	Mounting	PCDøM	øM1
14'	3.07"	11.93"	12.95"	1.14"	12.80"	16.22"	1.06"	1.38"	F12(S.T)/F14	4.92"(S.T)/5.51"	0.51"(ST)/0.71"
16"	4.02"	13.13"	14.21"	1.14"	14.76"	18.70"	1.06"	1.38"	F12(S.T)/F14	4.92"(S.T)/5.51"	0.51"(ST)/0.71"
18"	4.49"	14.11"	15.47"	1.50"	16.65"	20.87"	1.42"	1.97"	F14(S.T)/F16	5.51"(S.T)/6.50"	0.71"(ST)/0.87"
20"	5.00"	15.45"	16.81"	1.50"	18.62"	23.03"	1.42"	1.97"	F14(S.T)/F16	5.51"(S.T)/6.50"	0.71"(ST)/0.87"
22"	6.06"	16.63"	17.99"	1.50"	20.08"	25.08"	1.42"	1.97"	F14(S.T)/F16	5.51"(S.T)/6.50"	0.71"(ST)/0.87"
24"	6.06"	17.89"	19.37"	1.89"	22.05"	27.05"	1.81"	2.36"	F16	6.50"	0.87"

FACE TO FACE DIMENSIONS:
ISO 5752 TABLE 5 SHORT.
FLANGE:ANSI 125/150.
BS TABLE E.
JIS 10K.
DIN PN10.
DIN PN16.
MOUNTING FLANGE:ISO 5211
PRESSURE CLASS :150 PSI

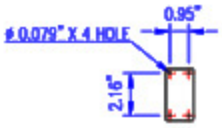

DETAIL "C"

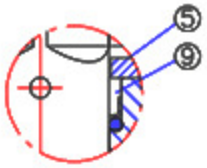

DETAIL "A"

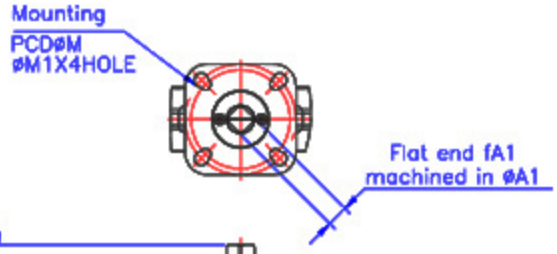

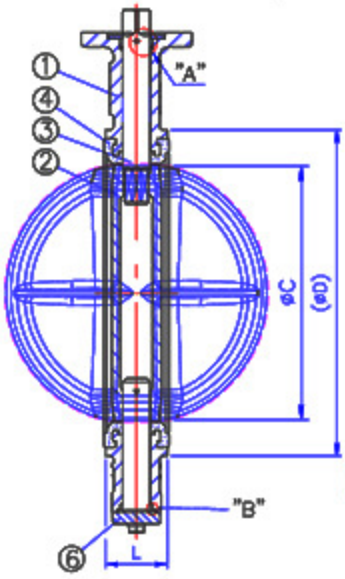

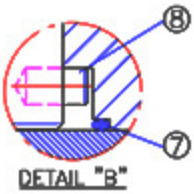

DETAIL "B"

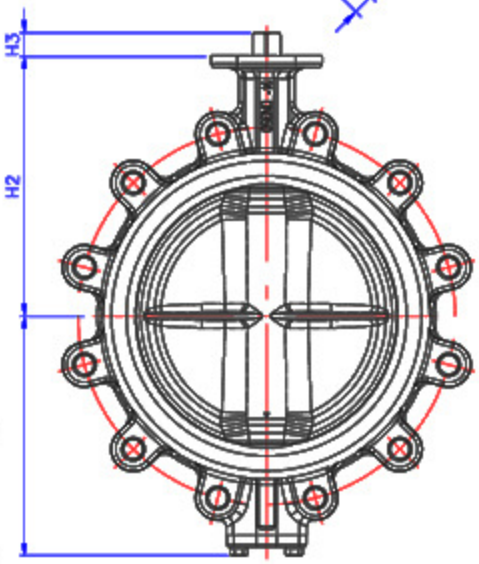

MATERIAL TABLE (ASTM)	
BODY	DISC
A126-B	A395
A395	A351 CF8
	A351 CF8M
	B148-954
SEAT	STEM
NBR	A182 F6A
EPDM	A182 F304
NEOPRENE	A182 F316
SILICON	
HYPALON	
VITON	

ITEM NO.	PART NAME	Q'TY	MATERIAL
9	BUSH	1	ASTM A240 304
8	STOP PIN	3	ASTM A182 F304
7	O-RING	2	NBR
6	BOTTOM	1	ASTM A126-B
5	UP COVER	1	ASTM A126-B
4	SEAT	1	SEE MATERIAL TABLE
3	STEM	2	SEE MATERIAL TABLE
2	DISC	1	SEE MATERIAL TABLE
1	BODY	1	SEE MATERIAL TABLE

Material of Construction

Body

- Cast Iron ASTM A126 Class B
- Ductile Iron ASTM A536 Grade 65-45-12
- Carbon steel ASTM A 216 WCB

Disc

- Nylon 12 Coated Ductile Iron ASTM A536 Grade 65-45-12
- DI ASTM A 536 Grade 65-45-12 + Aroxy coated
- 316 Stainless Steel ASTM A351 Grade CF8M

Stem

- 410 Stainless Steel ASTM A479 Type 410
- 316 Stainless Steel ASTM A276 Type 316
- Carbon steel BS 970

Seat

- EPDM - Food Grade
- Buna-N - Food Grade
- White Buna-N - Food Grade
- Viton® / FKM - Food Grade
- Silicone

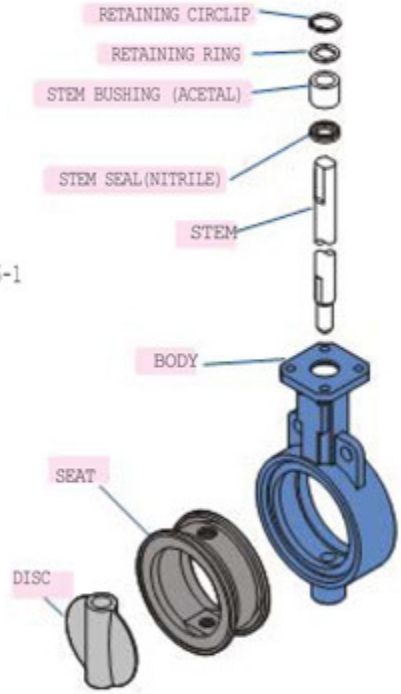

General Design and Manufacturing Standard: API 609 / BS EN -593

Seat Temperature Range:

Seat Type	Temperature Range	
	Min.	Max.
EPDM	-13°F (-25°C)	302°F (150°C)
BUNA-N	-13°F (-25°C)	212°F (100°C)
White BUNA-N	-13°F (-25°C)	212°F (100°C)
Viton® / FKM	23°F (-5°C)	392°F (200°C)
Silicone	-58°F (-50°C)	356°F (180°C)

Viton® is registered trademark of E.I. DuPont.

Testing Standard: API 598 / BS EN 12266-1

Pressure Rating:

For bi-directional bubble tight shut off and full vacuum service with disc in the closed position.

Inch	DN	PSIG	BARG
2"- 12"	50-300	175	12
2"- 24"	50-600	150	10
2"- 24"	50-600	50	3.5
* 2"- 12"	50-300	230	16

*Optional, contact factory for details.

Dead-End Service : Without a downstream flange installed, the dead-end pressure ratings are equal to the values stated above.

Operators

Valves up to size 12" can be supplied with lever handles for manual operation. Optional accessories for hand-lever operation can be provided for various flow control requirements. Pad locking can also be provided for preventing unauthorized operation.

Valves up to size 24" can be direct mounted with gear operators for manual operation. Gear operators can also be attached with chain-wheel operators for opening or closing valves located on pipelines at high elevations.

All valves can be direct mounted with pneumatic actuators or electric actuators and accessories for complete automation options such as fail open/close & positioner controlled. Valves can be mounted with manual overrides.